Computer Networks 270 (2025) 111545

Contents lists available at ScienceDirect

Computer Networks

journal homepage: www.elsevier.com/locate/comnet

Review article

A survey of existing attacks on 5G SA

Mengyi Gong, Ziling Wei *, Shuhui Chen, Wanrong Yu, Fei Wang

College of Computer Science and Technology, National University of Defense Technology, Changsha 410073, China

ARTICLE INFO

Keywords:
Attacks
Mobile network
5G SA
Security

ABSTRACT

Since the release of the Fifth Generation (5G) Stand-alone (SA) standard in 2018, there is a swift and widespread global adoption of 5G SA mobile network. For the present and foreseeable future, 5G technology will remain the core of mobile networks. Like previous generations of mobile networks, 5G networks have encountered numerous security issues during actual deployment and service provision, which have led to various serious impacts. Based on this, this paper systematically analyzes existing attacks targeting the User Equipment (UE), Radio Access Network (RAN), and core network of 5G networks. We propose a simple and effective method to investigate attacks on various parts of 5G networks, classify these attacks, and discuss their implications, causes, and defense solutions in detail. We find that most security issues have been theoretically addressed through defense solutions proposed in academic literature and 3rd Generation Partnership Project (3GPP) specifications. However, whether these solutions have been implemented in existing 5G networks remains to be verified. Through a deep analysis of existing 5G network security issues, this paper also proposes potential directions for future 5G security research, aiming to promote further research in the field of 5G security and enhance the overall security of future mobile networks.

Contents

1. Introduction 2
2. 5G preliminary 3
   2.1. 5G SA architecture 3
   2.2. NR protocol layers 4
      2.2.1. Physical layer 4
      2.2.2. Data link layer 4
      2.2.3. Upper layers 5
   2.3. Features of 5G 5
      2.3.1. Network function virtualization 5
      2.3.2. Service based architecture 5
      2.3.3. Network slicing 5
3. Motivation and method 5
4. Attacks on 5G UE 6
   4.1. Attacks on 5G baseband 6
   4.2. Attacks on USIM 8
   4.3. Summary 8
5. Attacks on 5G RAN 9
   5.1. Attacks on physical layer 9
   5.2. Attacks on layer two 11
   5.3. Attacks on upper layers 12
   5.4. Attacks on gNB 13
   5.5. Summary 13
6. Attacks on 5G core network 14
   6.1. Attacks on network slicing 14
   6.2. Access control mechanism defects 15

* Corresponding author.
E-mail address: weiziling@nudt.edu.cn (Z. Wei).

https://doi.org/10.1016/j.comnet.2025.111545
Received 25 January 2025; Received in revised form 10 June 2025; Accepted 8 July 2025
Available online 19 July 2025
1389-1286/© 2025 Elsevier B.V. All rights are reserved, including those for text and data mining, AI training, and similar technologies.

6.3. Attacks from open API ... 15
6.4. Flaws in cryptography ... 16
6.5. Summary ... 16
7. Advice for future work ... 16
7.1. Systematic security testing tools for mobile network ... 16
7.2. Automated security analysis tools for mobile network specifications ... 17
7.3. Identifying security vulnerabilities and defects in 5G new designs ... 17
8. Conclusion ... 18
CRediT authorship contribution statement ... 18
Declaration of competing interest ... 18
Acknowledgments ... 18
Data availability ... 18
References ... 18

1. Introduction

Since the first version of the Fifth Generation (5G) standard was published in December 2017, the deployment and application of 5G networks have expanded rapidly around the world. According to the data of TD Industry Alliance [1], at the end of the first quarter of 2024, 308 operators in 119 countries and regions around the world launched commercial 5G networks based on 3rd Generation Partnership Project (3GPP) standards, and the number of 5G users was about 1.68 billion. Public data from GSMA [2] indicates that 5G will account for 88% of total connections by 2030. It shows that the deployment and application of 5G will experience a fast growth under the current trend. At present, global operators have essentially built a mobile network that integrates 5G. It provides the communication infrastructure which is necessary for a variety of mobile services such as Internet of Things (IoT), ultra-high-definition video live streaming, and so on. Therefore, the reliability and security of mobile networks are closely linked to our daily lives and national economic development. However, are the commercial 5G networks really secure?

In the early stages of 5G network construction, the construction of the 5G network faced the problem of excessive investment, resulting in waste of the built 4G infrastructure. In order to avoid these problems and achieve the goal of rapid 5G deployment in the short term, 3GPP proposed the NSA (Non-Stand Alone) architecture and SA (Stand Alone) architecture. 5G NSA refers to the networking mode of 5G service by adding 5G base stations on the basis of the existing 4G network. In the NSA mode, 5G base stations as supplementary nodes access the 4G core network to jointly provide services for users [3]. 5G SA is a kind of networking mode based on 5G New Radio (NR) and 5G core network. In the SA mode, the 5G network does not rely on the existing 4G network infrastructure and uses new 5G technology and equipment from the Radio Access Network (RAN) to the core network. The NSA mode is a transitional mode. With the continuous development of 5G, the NSA mode will soon complete its historic mission. 5G SA networks will be widely deployed throughout the world in the future. Therefore, this paper focuses on the security issues of 5G SA network.

Building upon the security issues identified in the Long-Term Evolution (LTE), 5G networks have incorporated new security features, aimed at addressing the security concerns of previous mobile communication network. For example, the 5G RAN deploys 256-bit security algorithms, requires operators to support integrity protection for the data plane, and employs asymmetric encryption technology to protect the Subscription Permanent Identifier (SUPI) of users [10]. However, with the methods [11–14] for discovering 5G security vulnerabilities becoming more intelligent and diverse, researchers have exposed various security vulnerabilities in different parts of 5G networks. Moreover, with the continuous development of open-source Software-Defined Radio (SDR) tools, researchers can utilize these tools to demonstrate a variety of attacks against commercial 5G networks, including 5G SUCI-Catchers [15], Remote Command Execution (RCE) on 5G User Equipments (UE) [16,17], user location tracking, and Denial of Service (DoS) attacks [12,13], and so on. 5G will be the core technology of mobile communication network for a time to come. 5G security is directly related to the vital interests of users worldwide. Potential security issues may lead to widespread impacts. Therefore, a systematic analysis of the current attacks targeting the 5G network, along with a comprehensive summary of the implications, defense solutions, and causes of these attacks, is essential for advancing future research in 5G security. It can drive further research in the field of 5G security and enhance the overall security of future mobile networks.

There are several surveys related to 5G security. These surveys have reviewed the outcomes of existing 5G security research, but with various limitations. For instance, some reviews only focus on the security threats of a single technology. The review in [8] investigated the security issues of the network slicing technology used in 5G network. The review in [5] summarized the three-dimensional threat classification for 5G network based on Network Functions Virtualization (NFV) technology, including intra-layer threat, inter-layer threat, and multi-administrative domain threat. The review in [18] summarized the threats to the Service-Based Architecture (SBA) oriented towards 5G network. Some reviews concentrate on a specific part of the 5G network, such as RAN or the core network. The article in [6] surveyed the security threats of the physical layer in 5G RAN. The article in [7] summarized the security threats of the physical and Medium Access Control (MAC) layer in 5G RAN. The article in [4] summarized the security issues and threats of the 5G core network. The review in [9] summarized the security threats of 5G RAN, and classified 5G security technologies according to the Open Systems Interconnection (OSI) layered model. It discussed vulnerabilities and threats at each layer. However, the 5G network is a complex system that encompasses both wireless and wired networks. It is vague to generalize about mobile networks using the OSI model. This would lose some of the characteristics of mobile networks. It is not appropriate to simply use the OSI model for classification within the context of 5G. In general, the existing surveys lack an appropriate method for systematically analyzing and categorizing attacks targeting 5G networks and the types of attacks they collected are not comprehensive.

Due to the lack of a comprehensive security analysis of the 5G SA network, we conducted a comprehensive investigation into attacks on the existing 5G SA network. These attacks are classified according to different attack targets (i.e., UE, RAN, the core network). This review aims to provide 5G researchers and practitioners with a comprehensive perspective on 5G network security issues. To this end, we have proposed a simple and effective method to investigate the existing attacks on 5G SA networks. Specifically, we first conduct a comprehensive investigation of the attacks from the existing literature and classify these attacks. Then, we investigate the defense solutions for these attacks and analyze the remediation status of these attacks. Finally, we propose the future research direction according to the remediation status of these attacks. We organize and present existing attacks by providing and discussing their classification, implications, causes, and defense solutions. Table 1 shows a comparison of our work with previous reviews related to 5G attacks.

Table 1
Comparison of contents provided in existing papers.

Surveys on 5G attacks	Year of publication	Content	Security analysis	Method	Limitations
Kim [4]	2020	5GC	Causes	Classified by nine core network protocols	Focus on 5G NSA
Madi [5]	2021	5GC, NFV	Causes	Classified by three dimensions, including intra-layer threat, inter-layer threat, and multi-administrative domain threat	Focus on NFV
Sanchez [6]	2021	RAN	Causes and defenses	A survey of physical layer security for 5G	Focus on physical layer security without other layers
Harvanek [7]	2024	RAN	Causes and defenses	A survey of physical and MAC layer security for 5G	Focus on physical and MAC layer security without other layers
Gao [8]	2024	5GC	Causes and defenses	A survey of 5G network slicing system security	Focus on network slicing
Sullivan [9]	2021	RAN, 5GC	Causes and defenses	Investigated by OSI layers	It is vague to generalize mobile networks using OSI layers
This paper	–	UE, RAN, 5GC	Causes and defenses	Classified by the structure of the mobile network	A comprehensive survey on 5G security

Contributions. We summarize our contributions of this paper as follows.

- We provide a comprehensive view of existing attacks and threats against 5G networks. And we have made a reasonable classification and in-depth analysis of these attacks.
- We propose a method for investigating the existing attacks on 5G networks. First, we conduct a comprehensive investigation of attacks from the available literature. Then, we classify these attacks, investigate the mechanisms and defense solutions of these attacks, and analyze their remediation status. Finally, we propose future research directions.
- We propose three potential research directions. Specifically, it is necessary to develop a security testing tool to diagnose whether the real mobile network and devices have patched the security issues that are theoretically solved. There is a need to develop an automated security analysis tool tailored for mobile network protocols to enhance the security of the mobile network. It is crucial to conduct security research on the new technologies introduced to 5G networks, especially those related to 5GC.

Organization. The paper is organized as follows. Section 2 provides necessary background knowledge on 5G networks. In Section 3, we introduce the method used to investigate existing attacks on 5G networks. We categorize the attacks on 5G UE, RAN, and 5G Core (5GC) in Sections 4, 5, and 6, respectively. The impact, causes, and defense solutions of these attacks are also reviewed in the corresponding sections. Finally, in Section 7, we propose three potential future research directions, and we provide a conclusion in Section 8.

2. 5G preliminary

This section provides a brief description of the related preliminaries about the 5G mobile network, including the 5G network architecture, the protocol layers of the 5G NR, and the technological features of the 5G network.

2.1. 5G SA architecture

The 5G Mobile Network is a wireless communication standard technology established by 3GPP. By introducing SBA and NFV, 5GC has more refined functions compared to the previous 4G core network, with a clearer separation between the data plane and the control plane. Additionally, 5GC can operate on general-purpose computer hardware, unlike the dedicated hardware required for 2G/3G/4G networks. A typical 5G mobile network is usually composed of three main components, i.e., 5GC, 5G RAN, and 5G UE, which is shown in Fig. 1.

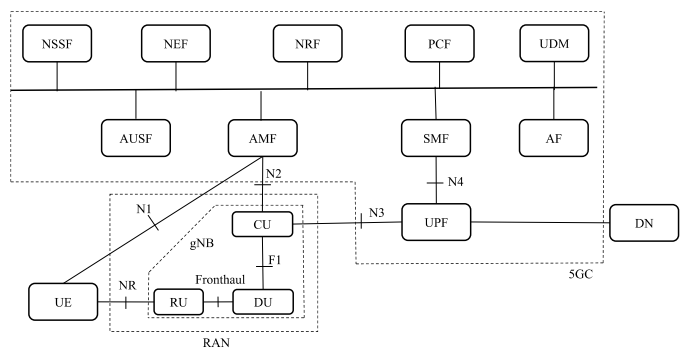

Fig. 1. The architecture of 5G network.

5GC is the "brain" of the 5G network, responsible for managing and controlling all devices connected to the 5G network. SBA is the fundamental concept of 5GC. Network Functions (NFs) of the core network are virtualized using NFV and can operate on common x86 servers. Fig. 1 illustrates the core network architecture. The Access and Mobility Management Function (AMF) is one of the most important control elements in 5GC. It is responsible for registration, connection, and mobility management. It provides authentication and authorization functions for user access, and serves as the access point for the control plane between UE and 5GC. AMF communicates with the UE via the Non-Access Stratum (NAS) protocol. Other NFs of the 5GC typically also include the Session Management Function (SMF) that is responsible for session management and IP address allocation, Authentication Server Function (AUSF) that is responsible for generating authentication parameters, User Plane Function (UPF) that is responsible for data packet routing, forwarding, monitoring, and Quality of Service (QoS) processing, Policy Control function (PCF) that is responsible for configuring service policies and service charging for UE, Unified Data Management (UDM) that is responsible for user authentication processing and Short Messaging Service (SMS) management, Network Repository Function (NRF) that is responsible for service function discovery, Network Slice Selection Function (NSSF) that is responsible for selecting the network slicing for UE, and Network Exposure Function (NEF) responsible for the collection, analysis, composition, and exposure of network capabilities. In addition, 5GC can extend the Application Functions (AF) responsible for various application-layer services.

RAN is a key element in the mobile network, transmitting information between UE and the core network via a radio connection. As the main network element in 5G RAN, the gNodeB (gNB) provides wireless access to 5G networks for users through the use of the NR

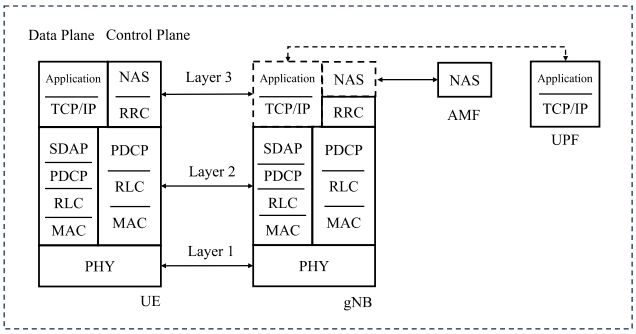

Fig. 2. Protocol stack of NR.

protocol. Compared to 4G networks, the functions of 5G RAN are further decomposed and virtualized. The gNB is divided into the Radio Unit (RU), Centralized Unit (CU), and Distributed Unit (DU). CU and DU interface with each other through the standardized F1 interface. RU and DU are connected to each other through the fronthaul network. RU is responsible for the transmission and reception of radio frequency signals. CU is responsible for high-level protocol processing and non-real-time services, and it can control and coordinate multiple cells within RAN. DU deals with physical layer protocols and real-time services, offering a low-cost deployment option. A single CU can manage multiple DUs. In other words, CU connects directly to the core network, while the DU connects to UE. This separation can effectively reduce the bandwidth requirements of the fronthaul network, and the mobility within CU is transparent to the upper layers, thereby reducing the signaling overhead and complexity of the core network.

UE usually refers to the Mobile Equipment (ME) equipped with a Universal Subscriber Identity Module (USIM). The International Mobile Equipment Identity (IMEI) uniquely identifies an ME, such as a smartphone. ME mainly comprises a radio frequency chip, baseband software, and other application software. Users can access the 5G services provided by the operator through inserting a USIM card into ME. USIM contains a unique SUPI, encryption keys, and algorithm configurations, which are used for user identification and authentication during the Authentication and Key Agreement (AKA) process with the AMF. SUPI is the permanent identity of the USIM card and must never be submitted in plain text except in the case of an emergency as described in the clause 5.2.5 of [10].

2.2. NR protocol layers

NR is the wireless access technology for 5G networks. It is a new set of globally universal wireless communication standards defined by 3GPP for the 5G mobile communication system. NR is responsible for wireless network communication between UE and gNB. NR continues the signaling and data separation design of LTE. NR can be divided into data plane and control plane. The data plane is used to transmit data. The control plane is used to transmit signaling. Their protocol stacks are slightly different. This subsection delineates the scope of the NR protocol layers addressed in this paper. Specifically, the paper concentrates on the physical layer, data link layer, and upper layer, as illustrated in Fig. 2.

2.2.1. Physical layer

The physical layer is the bottom layer of the NR protocol stack, responsible for the conversion between bit data and radio signals. This layer designs various physical channels and signals to achieve stable and efficient communication between UE and gNB.

In NR, time resources are divided into multiple wireless frames and wireless transmission is conducted through radio frames, subframes, slots, and mini-slots. The smallest frequency resource unit is called a subcarrier, and twelve subcarriers form a Physical Resource Block (PRB). A two-dimensional resource grid can be formed in both the time and frequency domains, where each grid is an Orthogonal Frequency-Division Multiplexing (OFDM) symbol corresponding to a subcarrier and is known as a Resource Element (RE). Physical channels refer to a set of REs that carry information from higher layers. Generally, NR physical channels are divided into uplink and downlink, including the Physical Downlink Shared Channel (PDSCH) for downlink data transmission, Physical Downlink Control Channel (PDCCH) for downlink control information transmission, Physical Broadcast Channel (PBCH) for broadcasting system information required for UE access to RAN, Physical Uplink Shared Channel (PUSCH) for user uplink data transmission, Physical Uplink Control Channel (PUCCH) for user uplink control information transmission, and Physical Random Access Channel (PRACH) for random access. Physical signals are time-frequency resources used by the physical layer but do not carry higher-layer messages and generally carry physical layer broadcast messages. For example, the Primary Synchronization Signal (PSS) and Secondary Synchronization Signal (SSS) are used for synchronization, the Reference Signal (RS) is used for channel estimation and channel sounding purpose.

The 5G physical layer incorporates several advanced technologies, such as Heterogeneous Networks (HetNets), massive Multiple-Input Multiple-Output (massive MIMO), and millimeter Wave (mmWave) communication. HetNets refer to a network where different mobile types and access technologies coexist, playing a foundational role in the scalability of 5G networks. Compared to previous antenna technologies, massive MIMO improves the system capacity and spectral efficiency of 5G by deploying a larger number of antennas. The mmWave technology, on the other hand, anticipates a shift to higher transmission frequencies.

2.2.2. Data link layer

Similar to the OSI model, the data link layer in NR is designed to organize bit data from the physical layer and provide relevant services to the upper layers. In the second layer, the control plane comprises three sublayers, which are MAC, Radio Link Control (RLC), and Packet Data Convergence Protocol (PDCP). The data plane includes four sublayers, which are MAC, RLC, PDCP, and Service Data Adaptation Protocol (SDAP).

MAC is responsible for the mapping, multiplexing, demultiplexing between logical channels and transport channels, scheduling, setting logical channel priorities, beam management and random access procedure. It also provides reliability through the Hybrid Automatic Repeat reQuest (HARQ) mechanism. UEs with an active radio connection within the same cell are distinguished from each other by the Radio Network Temporary Identifier (RNTI). The UE acquires the RNTI through the random access procedure.

RLC provides segmentation and reassembly functions for packets coming from the PDCP sublayer and sent to the PDCP sublayer. It is also responsible for error correction through Automatic Repeat reQuest (ARQ), managing the retransmission of service data packets. It provides reliability to the upper layers. The RLC sublayer offers three transmission modes, i.e., Transparent Mode (TM), Acknowledged Mode (AM), and Unacknowledged Mode (UM).

PDCP primarily fulfills the security tasks of the Access Stratum (AS). It encrypts and provides integrity protection for control plane messages, encrypts data plane messages, and optionally provides integrity protection for user data based on operator configurations. The PDCP protocol also offers an optional IP header compression function for data plane messages through Robust Header Compression (ROHC). It is important to note that PDCP is the first layer from the bottom up in the NR protocol stack to provide security functions, which means that all packets transmitted below this sublayer are transmitted without protection.

SDAP is a protocol unique to the data plane. In the 5G SA architecture, the concept of radio bearers from 4G networks is still employed. However, 5GC has refined the service implementation by moving from the bearer concept of 4G to QoS flows for more granular control. The function of the SDAP protocol is to facilitate the mapping between the Data Radio Bearer (DRB) on the wireless side and the QoS Flows in 5GC.

2.2.3. Upper layers

Above the data link layer, the third layer of NR comprises two sublayers, Radio Resource Control (RRC) and NAS.

RRC serves as the message and control center for the entire wireless communication protocol stack's AS. The primary role of RRC is to manage the radio session and control the radio bearers, including their establishment, maintenance, and release. It provides functions such as UE radio measurement control, AS security key agreement, transparent transmission of NAS messages. It also includes protocols for paging and system information broadcasting. Compared to LTE, NR introduces a new inactive state. In this state, the UE stores AS context information, listens for paging, and performs cell reselection procedures. UE and gNB only maintain links at RRC and PDCP sublayers, releasing the C-RNTI context. To identify the user, a new I-RNTI is established for user identification on both gNB and UE sides. By releasing air interface resources, it simplifies the RRC state transition process, saves the delay for the user to return to the connected state and reduces signaling overhead.

NAS is the termination for control plane signaling messages and is responsible for mobility management and session management of UE. Mobility management involves interactions with AMF, including UE authentication and security mode command. Session management deals with Protocol Data Unit (PDU) sessions between UE and SMF. However, their interactions also need to go through AMF. NAS also completes other tasks, such as updating the UE's tracking area location, executing paging processes, and allocating Temporary Mobile Subscriber Identity (TMSI) and IP addresses.

2.3. Features of 5G

From the perspective of different information interaction objects, the International Telecommunication Union (ITU) classifies 5G application scenarios into three major categories, enhanced Mobile BroadBand (eMBB), Ultra-Reliable and Low Latency Communications (URLLC), and massive Machine-Type Communications (mMTC) [19]. To meet the requirements of the aforementioned application scenarios, 5G introduces technologies such as SBA, NFV and network slicing. The technical features of existing 5G mobile networks are summarized as follows.

2.3.1. Network function virtualization

Mobile networks prior to 5G faced the issue of over-coupling of hardware and software. It led to the need for the network software to run on specifically designed hardware devices. When new network services and technologies were introduced, hardware and software would need to be redesigned. To address this problem, 5G introduced NFV. NFV is a technology that transforms wired and wireless network devices into standardized hardware structures and integrates independent software structures on top of them. NFV allows networks to dynamically expand new services without the need to install new hardware during operation, and it can run virtualized services on conventional servers. Through NFV, the functions of 5GC can be virtualized, which enhances the flexibility and scalability of 5G networks and also provides a foundation for the introduction of SBA and network slicing in 5G networks.

2.3.2. Service based architecture

As technology has evolved, the concept of microservices is widely used. The microservice refers to the practice of breaking down a collection of multiple functions into individual entities, each with its own distinct microservice. 5GC has adopted this concept and builds a business-oriented service-based architecture that achieves a technological upgrade characterized by low coupling and high cohesion. Within SBA, control plane functions are integrated and unified, while also being decomposed into multiple independent network functions. These independent network functions can be flexibly combined based on business needs. Each network service is decoupled from others in terms of business functionality and provides a uniform type of service-oriented interface to other callers, offering services and transforming multiple coupled interfaces into a single type of service-oriented interface. It can effectively reduce the number of interfaces and standardize the way services to invoke, thereby enhancing network flexibility. The service modules providing services can self-register, publish, and discover. 5GC eliminates coupling between traditional devices and simplifies the complex connections between different network functions, which in turn shortens service processes. Moreover, the SBA achieves the goal of decentralization. It allows data plane functions to break free from the centralized constraints of 4G. They can be deployed in the core network (e.g., data center) or in the access network (e.g., edge data center), enabling distributed deployment.

2.3.3. Network slicing

Within the scope of the 5G system architecture defined by 3GPP, the network slicing refers to a set of network functions that form a complete Public Land Mobile Network (PLMN) to provide services for UE. Network slicing is one of the main features of 5GC. Unlike the previous generation of mobile networks, it can divide a single physical network into multiple virtual networks based on specific cases. The advantage of multiple virtual networks is that mobile operators can offer controllable combinations of PLMN and specific services. It includes slicing 5GC to deploy only the needed network functions to support specific customers and scenarios, such as the scenario requiring ultra-low latency for the intelligent drive. Therefore, a single PLMN can be deployed by instantiating the needed functions and services to meet user requirements. SBA, along with the Software Defined Network (SDN) and NFV technologies, provides the foundation for operators to build network slices in response to customer needs.

3. Motivation and method

From 1G to 5G, mobile networks have experienced profound technological innovation and iterative development in terms of capability and security. Currently, 5G SA is being deployed on a large scale worldwide. The 5G network, from its inception, considered the various security vulnerabilities disclosed in the 4G era. 5G specifications designed by 3GPP provide enhanced security, including improvements to confidentiality and integrity protection mechanisms, protection of user identifiers, protection of NAS initial messages and more. However, in the actual deployment and use of 5G networks, many security issues of 5G networks have still been exposed.

Since the release of the first version of the 5G SA specifications in 2018, researchers have proposed many types of attacks that have made a significant impact on 5G networks. These security issues of 5G SA networks may cause growing impacts and threats in the future, seriously endangering the security and development of 5G mobile networks. Therefore, ensuring and enhancing the security of 5G networks is a necessary and important subject.

To address it, this paper introduces a simple and effective survey method applicable to 5G networks. The method begins with an investigation of known attacks, followed by the analysis of the current remediation state of these attacks in actual mobile networks based on existing defense solutions and the latest 3GPP specifications, and finally proposes potential research directions aimed at enhancing the security of future mobile networks. The simple logic diagram of the proposed method is shown in Fig. 3.

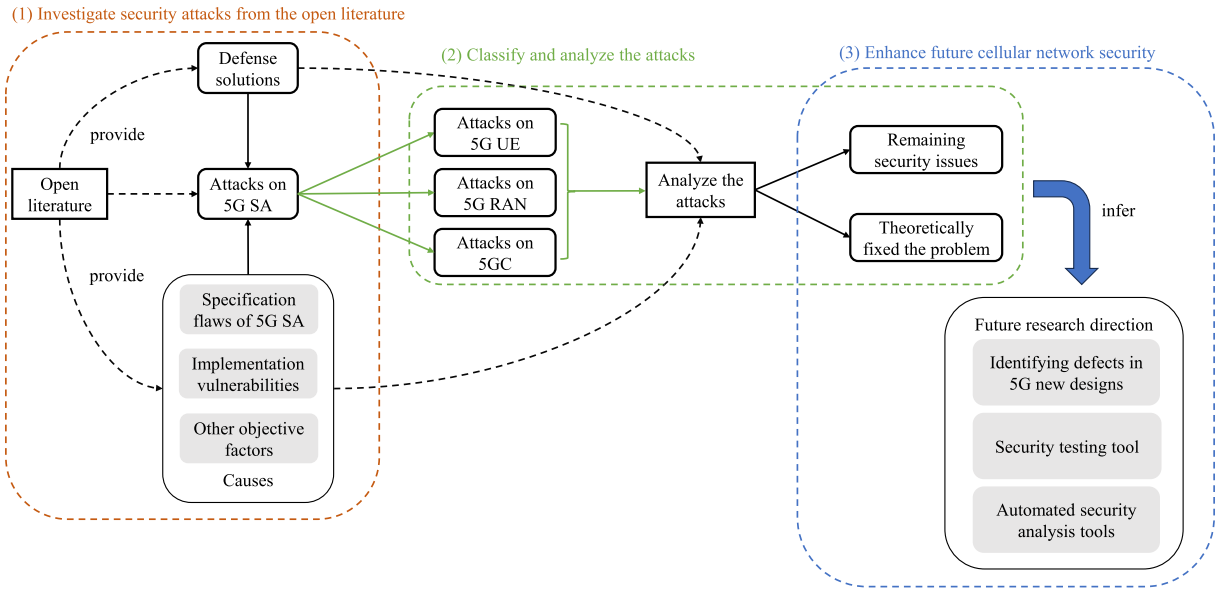

Fig. 3. Simple logic diagram of the proposed method in this article.

(1) Investigate attacks from the open literature. Firstly, we investigate the attacks on 5G networks proposed in existing literature since the initial release of 5G SA specifications in 2018. We not only describe the specific implications and impacts of various attacks but also analyze the defense solutions for these attacks from corresponding academic literature and 3GPP specifications. Furthermore, we conduct an in-depth analysis of the causes of various attacks, which can be divided into three major categories, i.e., specification flaws in 5G SA (denoted as C1), implementation vulnerabilities by equipment manufacturers and operators (denoted as C2), and other objective factors (denoted as C3), such as the openness of wireless channels. We believe that effectively identifying and repairing the vulnerabilities in actual 5G networks that lead to these attacks (i.e., known security issues) is the key to ensuring and enhancing the security of existing and future mobile networks.

(2) Classify and analyze the attacks. We analyze the mechanisms and impacts of various attacks targeting 5G SA network discovered in the first step, and classify them into several categories according to their characteristics, as shown in Fig. 4. Then, We analyze the security enhancements against these attacks in 3GPP specifications (if specified) and the defense solutions proposed in the corresponding academic literature. Based on this, we determine the current repair status of these attacks in combination with their causes. Generally, either the security issue has been theoretically resolved by defense solutions proposed in the literature or the latest specifications, or it remains an existing security issue in current 5G networks and may be affecting actual deployed 5G networks. For example, the decades-old International Mobile Equipment Identity (IMSI) catcher problem has been theoretically resolved through the introduction of asymmetric encryption in 5G specifications. In contrast, wireless interference attacks at the NR physical layer still lack effective solutions, and the integrity protection of the data plane has not been mandatorily enhanced.

(3) Enhance future mobile network security. Based on the analysis of various attacks on 5G SA and their remediation status, we attempt to summarize future research directions on mobile network security to enhance the security of future mobile networks. Specifically, most attacks have been theoretically mitigated through corresponding defense solutions. However, it remains to be further confirmed whether these security issues have been fixed in real 5G networks. Therefore, we suggest that open-source SDR systems can be utilized to develop a systematic security testing tool. This tool can be used to verify the remediation status of these security issues. Natural Language Processing (NLP) technology has obtained a significant development and been adopted in many fields. We propose the introduction of NLP to automatically conduct security analysis on 3GPP specifications described in natural language. This could effectively improve the efficiency of specification security analysis and ensure the security of 5G specifications. Additionally, 5G introduces many new technologies and concepts, such as network slicing and SBA, which bring significant benefits to 5G networks. However, these technologies may also introduce new attack surfaces and security issues, such as access control vulnerabilities brought about by the OAuth framework. We recommend focusing 5G security research on the security analysis of new designs in 5G networks.

According to Section 2.1, 5G SA network can be divided into three parts, UE, RAN and core network. This paper uses the above investigation method to conduct a comprehensive investigation of attacks on 5G SA. RAN is based on wireless networks. The core network is based on wired networks. Their protocols are quite different. UE is a radio device that interacts with the user. Each of these three has different characteristics, which leads to attacks on each of them having different characteristics. Therefore, Based on 5G SA network architecture, we classify attacks on 5G SA network into three categories, attacks on 5G UE, attacks on 5G RAN, and attacks on 5GC. Each category is further subdivided into several subcategories according to the characteristics of this part of the network and corresponding attacks. The specific classification of attacks is summarized in Fig. 4.

4. Attacks on 5G UE

This section introduces existing attacks targeting various vulnerabilities in 5G UE, mainly referring to commercial mobile terminal devices. These attacks aim to disrupt and undermine the normal function of UE, even remotely control UE. This section categorizes them into two main types, attacks targeting the baseband and attacks targeting USIM. Depending on different classification criteria, each category can be further divided into several subcategories as shown in Fig. 4. This section discusses the specific implications, impacts, causes, and existing defense solutions for various attacks on 5G UE. These are summarized in Table 2.

4.1. Attacks on 5G baseband

The main security threat that UE faces pertains to vulnerabilities within the baseband software. Baseband is the circuit responsible for

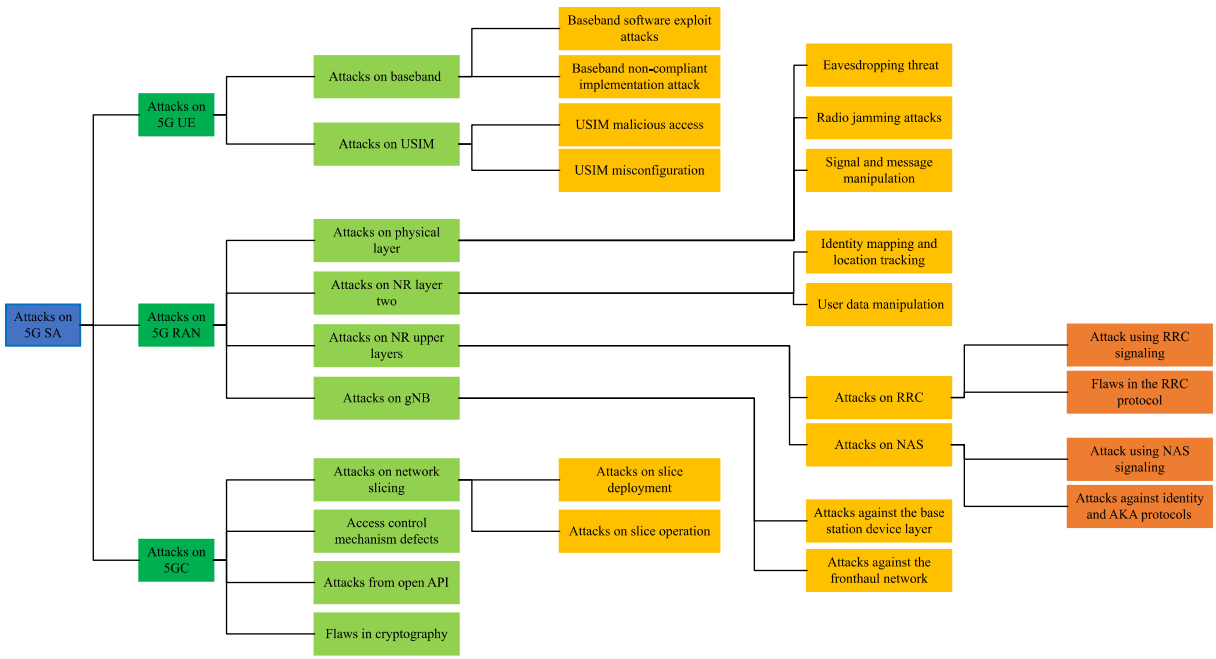

Fig. 4. Taxonomy of attacks on 5G SA.

Table 2
Threats and attacks on 5G UE.

Classifications		Implications	Causes	Defensive solutions
Attacks on baseband	Baseband software exploit attack [16,17]	• RCE for UE • Remote SMS capture and forwarding	• C2-Equipment manufacturers write insecure code that leads to software vulnerabilities	• Use newer compilation tools or a more secure programming language • Use binary vulnerability detection tools
	Baseband non-compliant implementation attack [11,20]	• Bypass the 5G AKA mechanism • Bypass the AS security mechanism • MitM attack in 5G data plane	• C2-The equipment manufacturer's implementation does not conform to the protocol specifications	• Introduce automated vulnerability detection techniques
Attacks on USIM	USIM malicious access [21,22]	• Bypass PIN-based access control • Illegally read the USIM's security context to achieve identity spoofing	• C1-The access control specification for USIM is flawed • C2-Unsafe operation of USIM by operators	• Improved USIM security-related specifications • Operators avoid unsafe operations
	USIM misconfiguration [23]	• 5G SUPI capture	• C2-The USIM configuration is insecure	• Operators modify the insecure configuration

demodulating, descrambling, despreading, and decoding wireless signals in UEs. And it is responsible for passing the decoded digital signals to the upper layers for further processing. Baseband software is crucial for UE because it implements the mobile communication of UE. However, due to the openness of the wireless environment, baseband needs to accept data from untrusted remote sources (via radio, etc.). It may lead to various remote attacks. At the same time, due to the transparency of 5G networks to users, it is difficult for users to detect and defend against these attacks. Based on the causes of the attacks, attacks targeting the baseband can be divided into two types, baseband software exploit attack and baseband non-compliant implementation attack.

(a) Baseband software exploit attacks. Usually, complex software inevitably have software vulnerabilities due to human error during the development process. As a complex software system, baseband software also has various software vulnerability issues during its development and implementation. As early as 2012, researchers proposed exploitation attacks on baseband software. They utilized a stack overflow vulnerability in the GSM baseband software of commercial UEs like iPhones to perform RCE [24]. Subsequently, researchers continuously examined the baseband code of mobile networks (2G, 3G, or 4G) and achieved wireless remote code execution [25–28]. Since the commercial deployment of 5G began in 2019, researchers have turned their attention to the baseband software of commercial 5G UEs. In 2021, KeenLab disclosed the first application instance of a 5G UE vulnerability, where they conducted RCE by exploiting a stack overflow vulnerability in the IP Multimedia Subsystem (IMS) module code of the baseband [17]. Specifically, it is due to the lack of stack cookie protection in the internal XML parser of the baseband. This parser is responsible for parsing IMS messages from mobile networks to the UE's baseband. With the help of SDR tools and open-source mobile network protocol stacks, researchers set up a fake mobile network providing IMS services. Then, researchers remotely sent a Proof of Concept (PoC) to UE through the fake mobile network, remotely modifying IMEI of a commercial 5G UE. In 2023, Karimi et al. [16] verified the remote attack on the Google Pixel devices by exploiting two baseband software vulnerabilities, CVE-2022-20170 and CVE-2022-20405. CVE-2022-20170 allows attackers to control the heap Out-of-Bounds (OOB) write, thereby writing attack data. CVE-2022-20405 refers to the misconfiguration of the Memory Management Unit (MMU) that allows specific memory to be writable and executable. By combining these two vulnerabilities, remote SMS capture and forwarding were achieved using SDR tools.

(b) Baseband non-compliant implementation attack. Baseband non-compliant implementation attacks differ from baseband software vulnerability exploitation attacks in that the latter are caused by code

vulnerabilities, while the former may not have code flaws but instead have security vulnerabilities due to non-compliance with the security requirements of the specifications. Baseband software shall comply with the specifications defined by 3GPP [29]. But it is very challenging to implement baseband software exactly according to 3GPP specifications. 3GPP specifications are an extremely large and complex set of standards. Due to their complexity and vastness, 3GPP specifications are often found to have inconsistencies between requirements and unclear descriptions [30,31,12]. As a result, developers can easily make non-compliant implementation errors, leading to serious security issues such as DoS attack and authentication bypass. Baseband non-compliant implementation attack is the most common attack on 5G UE. It can be divided into two categories based on different types of errors, incorrect processing and misconfigurations. Incorrect processing includes incorrect processing of messages, security headers, and message fields. Misconfigurations mainly refer to the security algorithm configurations of AS and NAS not meeting the specification requirements. Tu et al. [11] disclosed dozens of baseband non-compliant implementations in commercial 5G UEs, including serious attacks such as 5G AKA bypass attacks and AS security bypass attacks. Specifically, a certain type of baseband sends the *Registration Request* without establishing NAS or RRC layer security and receives a plaintext *Registration Accept* from a fake base station, which is integrity protected and encrypted with a new 5G NAS security context. Attackers can exploit this incorrect implementation to completely bypass the 5G AKA process, grant UE an unprotected data session, and send phishing messages to the victim. Some basebands accept the *Security Mode Command* of RRC with null integrity protection algorithm (NIA0) and null encryption algorithm (NEA0). Attackers can use this vulnerability to bypass RRC layer security and inject any plaintext RRC message without a valid MAC. Yu et al. [20] publicly disclosed the security algorithm configuration test results of ten commercial 5G UEs, revealed six vulnerable implementations, and proposed three PoC affecting 5G UEs, including 5G double redirection attacks and 5G data plane Man-in-the-Middle (MitM) attacks.

Defenses. For baseband vulnerabilities, the best solution is to conduct security testing during development. It alleviates baseband security issues at source. What is more, black-box testing of released basebands through vulnerability detection techniques (fuzz, symbolic execution, etc.) to find vulnerabilities and fix them is a viable solution. Currently, scholars call for additional security measures, such as using updated versions of compiler toolchains, deploying sanitizers in critical code, and transitioning to more secure programming languages [32]. However, due to the complexity of 3GPP specifications and the inevitable human errors in the baseband software development process, it is very difficult to completely avoid the above two types of attacks from the source of software development. Existing research mainly focuses on security testing after development. Since the baseband of commercial UEs is closed-source, manual reverse engineering of baseband firmware for vulnerability detection is very difficult and inefficient. In recent years, many scholars have begun to try to introduce automated vulnerability detection methods such as fuzz testing, taint analysis, and differential testing. For example, Bitsikas et al. [33] developed the first open-source 5G UE security testing framework based on open-source mobile systems (Open5GS [34] and srsRAN [35]). Li et al. [36] designed and developed a static binary analysis tool called BaseMirror, which uses a bi-directional taint analysis algorithm to automatically reverse engineer commercial baseband and detect vulnerabilities. Khandker et al. [37] designed a fuzz testing tool for NAS layer protocols of 5G UEs and evaluated its effectiveness using the Large Language Model (LLM). Tu et al. [11] designed 5GBaseChecker, which is an automated, scalable black-box security analysis framework based on differential testing. It is capable of automatically constructing the Finite-State Machine (FSM) of 5G basebands and discovering non-compliant implementations by comparison. These tools can effectively help developers enhance the security of baseband software.

4.2. Attacks on USIM

The USIM is another crucial component of the UE, storing the user's authentication credentials for accessing 5G networks, such as IMSI and permanent authentication key. During the AKA procedure, these credentials are used to complete key derivation and mutual authentication between UE and mobile networks, ensuring the security of communications [38]. Due to the significance of the user identity information and authentication keys stored on USIM, attacks targeting USIM are also one of the security threats faced by 5G UEs. Moreover, according to research by Lisowski et al. [39], if an attacker gains control of USIM through physical contact or remote SMS communication, malicious USIM can easily trigger vulnerabilities in the baseband. Based on the causes of attacks, attacks on the USIM can be divided into two types, USIM malicious access and USIM misconfiguration.

(a) USIM malicious access. As an essential part of the UE, USIM should comply with the specifications defined by 3GPP. If the implementation of USIM deviates from these standards, it may introduce security issues. For instance, 3GPP has proposed PIN-based access control [40] to prevent malicious access to the secure context stored on USIM. The security context is a collection of security information shared between the mobile network and a UE to protect data and signaling during communication. It includes encryption keys, integrity protection parameters, authentication information and so on. Zhao et al. [21] revealed three vulnerabilities in the USIM's PIN-based access control, which could lead to the theft of information data within USIM, further resulting in numerous attacks, including traffic interception and MitM attacks. Cui et al. [22] discovered that due to design flaws in the specifications and insecure operations by operators, USIM issued by two operators had security issues. The security context stored on USIM can be read illegally, and the stolen security context can be used for identity forgery to bypass the security context checking mechanism in the baseband. Attackers can exploit these vulnerabilities to register to mobile networks on behalf of the victim and then launch other attacks, including one-click authentication bypass [41].

(b) USIM misconfiguration. In addition to storing the user's authentication credentials, USIM also stores certain security configuration information, such as configurations indicating the encryption algorithm for SUPI's encryption. USIM is manufactured and issued by operators. If they misconfigure USIM, it could lead to the leakage of private information and compromised security of 5G communications. For instance, Nie et al. [23] discovered through real mobile network testing that, due to misconfiguration by the operators in a certain region, UE transmitted SUPI using a null encryption scheme over the air interface. This means that SUPI is transmitted in plaintext over the air interface without any protection. It allows attackers to obtain the user's SUPI through fake base stations, as in 4G. It can lead to further attacks, such as location tracking.

Defenses. The attack on USIM requires operators to fix it. Existing defense measures rely on manual experimental testing to identify non-compliant implementations, followed by reporting the errors to operators. Then, operators address the security issues. For instance, in response to the issues discovered by Cui et al. [22] during testing, the relevant operators effectively prevented malicious reading of the secure context by enhancing the security of USIM. The issue of SUPI plaintext transmission reported by Nie et al. [23] can only be defended by the relevant operators fixing the USIM misconfigurations.

4.3. Summary

Attacks on UE are mainly divided into attacks on baseband and attacks on USIM. The attacks on baseband are mainly caused by the defects of baseband software. These attacks are highly targeted, usually targeting a particular model or brand of baseband. They also have a greater impact. It is usually possible to implement RCE for UE. Typically, attackers can use SDR tools (such as Universal Software

Radio Peripheral (USRP) [42]) to create fake base stations and remotely carry out attacks on the baseband in the air interface. The attacker can launch an attack at a certain distance (such as 50 m) without having to contact the victim UE.

The attacks on USIM are mainly due to flaws in USIM's protection mechanism and configuration. These attacks can often lead to advanced attacks. Attackers usually need to access USIM through social engineering to trigger attacks on USIM. It makes attacks on USIM difficult to carry out.

Remediation. Most of the attacks are due to non-compliant implementations by operators and equipment manufacturers, and they can be detected by existing detection methods. This shows that if operators and equipment manufacturers take effective measures, these attacks can be remedied in actual 5G mobile networks. In addition, the security awareness of users is important. For example, if users enable the PIN code protection of USIM, most attacks against USIM will be blocked. Strengthening users' security awareness plays a significant role in defending against attacks against UE.

5. Attacks on 5G RAN

Due to the openness of wireless channels and the complexity of related protocol specifications, security issues in RAN have always been a concern for both academia and industry, with various security issues emerging continuously. This section describes attacks targeting 5G RAN. Based on 5G RAN architecture, the attacks introduced in this section against 5G RAN are categorized into attacks on 5G air interface and attacks on gNB. Attacks on 5G air interface can further be divided into attacks on physical layer, attacks on layer two, and attacks on upper layers. Based on different classification criteria, each category can be further divided into several subcategories of attacks as shown in Fig. 4. Similar to the previous section, this section discusses specific implications, impacts, causes, and existing defense solutions for various attacks on 5G RAN. These are summarized in Table 3.

5.1. Attacks on physical layer

In 2017, 3GPP released the 5G NR specifications, which have become the primary reference for the deployment of 5G RAN. 5G NR introduced new technologies such as Massive MIMO, spectrum sharing, and beamforming [63]. And 3GPP enhances the security design of the protocols. However, due to the openness of wireless environment and protocol standards like LTE, 5G NR has also been subjected to various physical layer attacks during its deployment and operation. These attacks aim to disrupt and interfere with the normal functioning of physical layer. Based on whether and how the attacker interferes with the air interface physical layer communication, attacks on physical layer are categorized into three major types, eavesdropping threat, radio jamming attacks, and signal manipulation attacks.

(a) Eavesdropping threat. The first security threat faced by the physical layer is the issue of information leakage in the open wireless environment. Within a certain range, anyone can passively receive wireless signals, decode them into messages according to the specifications, and extract the information contained within. This process is known as eavesdropping. Based on the type of messages intercepted, eavesdropping attacks can be divided into two types, cell information sniffing and user information eavesdropping.

Cell information sniffing aims to obtain the system configuration parameters of a base station's cells in a specific area. According to 5G NR protocol specifications, these parameter messages are included in cell broadcast messages that are periodically sent in plaintext. For instance, Master Information Block (MIB) and System Information Block (SIB) messages contain cell-related parameters, including the cell's PLMN, cell ID, and radio resource configuration information, among others. 5G NR incorporates beamforming to direct the transmission and reception of signals. It diminishs the physical expanse through which information may be intercepted during transmission. But the broadcast information within NR remains devoid of encryption protections. With the aid of the software and hardware tools which is based on SDR systems, cell-related parameter information remains vulnerable to eavesdropping [43].

User information eavesdropping primarily targets information transmitted over the air interface that is related to the user, such as the user's SUPI and paging messages. In 4G, the plaintext transmission of IMSI has been criticized by researchers. Therefore, in 5G, SUPI is encrypted and transmitted using asymmetric encryption. Specifically, UE encrypts and sends SUPI using the original public key that is securely configured under the control of the home network. In addition to the core network with the corresponding private key, other illegal networks cannot obtain the real SUPI. However, according to measurement reports by researchers, there are still instances of SUPI being transmitted in plaintext during actual deployment [23], which makes user information eavesdropping feasible on 5G NR. Transmitting the SUPI in plaintext decreases location privacy to the level before 5G. In theory, all communication transmissions over the air interface (signaling or data) can be intercepted in the open wireless environment, and then plaintext information related to the user can be extracted to achieve the purpose of eavesdropping.

Although eavesdropping on wireless channels may not have a direct significant impact on users and networks, It is often the basis for other advanced attacks with more serious effects. Therefore, eavesdropping attack is the most common attacks targeting 5G RAN. For instance, intercepting cell parameter configuration information can assist attackers in launching more sophisticated attacks, such as intelligent jamming attacks [45] or utilizing parameters to set up a fake base station (FBS) [64]. Despite 5G having defense measures against fake base stations, research [65] has demonstrated that 5G is still vulnerable to such attacks. Ludant et al. developed the first open source 5G sniffer capable of eavesdropping on 5G control channels, intercepting control channels and eavesdropping on RNTI. Attackers can leak the location of the target user by associating the target's phone number with the RNTI. [43]. Therefore, the threat of eavesdropping has a non-negligible potential impact on the security of mobile network air interfaces.

(b) Radio jamming attacks. Like other wireless communication systems, 5G RAN is also susceptible to physical layer wireless jamming attacks. The purpose of radio jamming attacks is to disrupt the normal communication link between UE and the base station. Attackers can launch DoS attacks by deliberately transmitting noise signals or deceptive signals into the wireless channel. Building on research into LTE wireless jamming attacks [66–69], 5G NR incorporated more dynamic features in the physical channel protocol design and abandoned sparse control channels (such as the Physical Control Format Indicator Channel (PCFICH)). These improvements enhanced the anti-jamming capabilities of 5G NR. However, research indicates that wireless jamming attacks against 5G NR are still feasible and easy to implement at low cost. Mohsen [44] demonstrated that in 5G NR physical channels, the loss of orthogonality between subcarriers can lead to intercarrier interference, which in turn can cause severe DoS for users. Through the vulnerability analysis of the 5G RAN's PBCH, PDCCH, PUCCH, PRACH, and Massive MIMO, Arjoune et al. [45] showed that these messages and technologies are all vulnerable to intelligent jamming attacks.

5G RAN introduces more secure designs that make radio jamming attacks more complex and costly. But it does not entirely eliminate the threat of radio jamming attacks, which remain a significant security threat to 5G physical layer.

(c) Signal manipulation attacks. In wireless communication systems, messages are the abstraction and logical level definition of bit data, and bit data is modulated into wireless signals with physical transmission characteristics [70]. Any form of manipulation of signals or messages by attackers (such as injection or modification) can affect normal communication between parties. As a typical mobile wireless

Table 3
Threats and attacks on 5G RAN.

Classifications			Implications	Causes	Defense solutions
Attacks on physical layer	Eavesdropping	Cell information sniffing [43]	• Sniffing information enables other higher level attacks	• C1-Lack of protection for vital information in broadcast and initial signaling messages • C3-Openness of wireless channels and NR standards	• Encrypt cell and user important information
		User information eavesdropping [23]	• Leakage of user identity information • Leakage of user location information		
	Radio jamming attacks [44,45]		• DoS attack • Reduce communication quality	• C1-Some channels of 5G RAN are vulnerable to intelligent jamming attacks • C3-Openness of wireless channels and NR standards	• Design defense solutions to mitigate or counteract interference
	Signal manipulation attacks	RF Spoofing [46–48]	• Interferes with physical layer processes such as cell search and selection • Induce UE to fake base stations	• C1-UE searches and selects the cell with the strongest signal • C1-The protocol lacks the validity verification of the fraudulent information	• Modifiy and improve cell search and selection process
		SigOver attack [49,50]	• Cause a signaling storm in the core network • DoS attack	• C1-The protocol lacks validity verification of the masked message • C3-Physical properties of the capture effect	• Use the changing nature of physical signals to detect SigOver attack • Integrity protection of broadcast messages
Attacks on NR layer two	Identity mapping and location tracking [51,52,43]		• Leakage of user identity and location information	• C2-Operators do not configure protection for the user's SUPI • C1-Traffic sniffing and monitoring side channel attacks expose user identities	• The operators implement the SUPI encryption
	User data manipulation [53,54,52,55]		• DoS attack • Modify or forge user traffic	• C2-Operators do not configure integrity protection for the data plane	• Operators implement integrity protection for the data plane • Design the data plane attack detection solution
Attacks on NR upper layers	Attacks on RRC sublayer	Attack using RRC signaling [56,57]	• Induce UE to fake base stations • DoS attack	• C1-UE could not authenticate the fake base station during initial connection • C2-Improper handling of insecure RRC signaling by the UE	• Protection of RRC initial signaling • Perform RRC signaling tests on UE • Design a security solution against fake base stations
		Flaws in the RRC protocol [12,13,56]	• DoS attack • UE device capability exposure and manipulation	• C1-There is a conflict of expressions in the RRC protocol • C2-Incorrect implementation by operators and equipment manufacturers	• After the RRC security context is established, redirection instructions, UE capability messages, and measurement report messages are allowed to be sent • Detect protocol defects with automated tools
	Attacks on NAS sublayer	Attack against identity and AKA protocols [23,58]	• Leakage of SUPI • The SQN protection mechanism of AKA protocol is broken by replay attack	• C1-The SQN mechanism uses XOR and lacks randomness • C2-SUPI protection is not configured by the operators	• Operators implement 5G enhanced security deployment • Use automated tools to detect protocol defects • Use tools to check NAS implementation
		Attack using NAS signaling [59,60,12,13]	• DoS attack • Leakage of 5GMM capability • Downgrade attack	• C2-Operators do not implement encryption of the initial NAS message • C1-There is a conflict of expressions in the NAS protocol • C1-Protocol design flaws for NAS count • C2-The UE incorrectly receives reject messages that are not secure	
Attacks on gNB	Attacks against the base station device layer [61]		• Remotely control base stations to sniff, hijack, and tamper with user traffic	• C2-Device manufacturers write insecure code resulting in device layer binary vulnerabilities	• Carry out vulnerability detection test on base station
	Attacks against the fronthaul network [62]		• DoS attack • Similar to traditional physical layer attacks	• C1-Frontaul network integrity protection is optional	• The integrity protection of the forward network is enforced

communication system, physical layer of 5G NR is also subject to security threats from such manipulation attacks. Radio Frequency spoofing (RF spoofing) and Signal Overlay (SigOver) attacks are two main types of manipulation attacks targeting physical layer of 5G NR. Their main difference lies in whether the attacker needs to synchronize precisely with the target base station in terms of time and frequency.

RF spoofing attacks involve transmitting fake signals and messages at a higher transmission power into the wireless transmission channel, causing UE to receive and decode these fake cell signals and messages [46–48]. This takes advantage of the protocol property of UE to search and select the cell with the strongest signal at a given frequency. RF spoofing does not require frame synchronization with the target base station. For instance, sending a fake PSS at a higher power and the same frequency as the legitimate cell can prevent UE from detecting the synchronization signal of the legitimate cell. Alternatively, by transmitting a series of physical signals and necessary messages required for the cell selection process (such as MIB, SIB, etc.), target UE can be induced to connect to a false base station controlled by the attacker, which is the fundamental principle of establishing a fake base station.

SigOver attack is a type of LTE physical layer attack proposed in the paper [49]. The attacker sends carefully crafted wireless subframes (signals) at higher power to the expected time-frequency positions of the LTE physical broadcast and paging channels, overlaying the legitimate cell's broadcast and paging channels, and manipulating the actual messages received by victim UE, which is a type of signal injection attack. By exploiting the vulnerability of the lack of protection mechanisms in broadcast messages, SigOver attacks can introduce anomalies or malicious behaviors on victim UE. For example, by injecting fake SIB messages, attackers can cause signaling storms on the core network or subject UE to DoS attacks [49]. Since 5G NR specifications have not added any protection mechanisms for broadcast messages, SigOver attacks using these messages remain feasible. Furthermore, Norbert [50] proposed SigUnder attack for 5G networks, which is a more energy-efficient and stealthier version of SigOver attack. This attack leverages the polar coding mechanism and the physical layer OFDM structure of 5G to transmit signals at a power lower than that of the legitimate gNB, thereby masking 5G Synchronization Signal Block (SSB) messages.

Defenses. Regarding the eavesdropping threat, existing defense solutions mainly focus on encrypting the critical information which is sent in plaintext over the wireless channels for both the cell and the users. Encrypting broadcast messages introduces a key management challenge. All potential receivers require the decryption key for any base station. Now 5G has attempted to introduce asymmetric encryption, which can be used to address eavesdropping threats. But 3GPP and operators must consider energy consumption and efficiency, which determines whether to deploy encryption for broadcast messages. In response to radio jamming attacks, the primary defense method currently is to devise mitigation strategies against such attacks. For instance, Mohsen [44] proposed a defense solution that first detects the attacked subcarriers on the user side under non-orthogonal conditions and then employs a multiplicative signal to counteract the jamming attack. Many researchers have proposed defense solutions against signal manipulation attacks. Labib et al. suggested that simply modifying the UE physical layer's cell search and selection processes can help avoid DoS attacks [46,47]. Additionally, setting timers for receiving SSS and decoding MIB can mitigate synchronization signal spoofing attacks [46]. In the paper [49], authors proposed leveraging the constantly changing characteristics of physical signals to detect SigOver attacks. Furthermore, providing integrity protection for unprotected broadcast messages can help prevent such attacks in the long term. For example, developing a PKI-based authentication mechanism to digitally sign broadcast messages [49,71]. In the paper [50], authors designed a defense scheme to mitigate both SigUnder and SigOver attacks and conducted effectiveness testing.

5.2. Attacks on layer two

This subsection discusses attacks targeting layer two of 5G NR. Compared to physical layer and upper layers, there is less work focused on this layer. Identity mapping and data plane manipulation attacks are two types of attacks aimed at layer two, which primarily exploit protocol vulnerabilities in MAC, RLC, and PDCP of 5G NR, particularly the deficiencies in the data plane data protection mechanisms of PDCP sublayer.

(a) Identity mapping and location tracking. Identity Mapping refers to the process of mapping and transforming different identifiers of users. It is used to identify the real identity of UE. In addition to using identifiers assigned by the core network (such as SUPI and TMSI), the air interface also employs RNTI to uniquely identify users in a cell during a wireless connection session. RNTI is allocated by the base station. LTE has been found to have RNTI-related vulnerabilities that can lead to identity mapping and location tracking. For instance, if the allocation mechanism of RNTI lacks randomness, it is possible to identify and track LTE users by passively eavesdropping on RNTI [51]. By monitoring RNTI and TMSI and mapping them, attackers can identify and track LTE users in a cell, even if RNTI changes randomly during each wireless connection session [52]. Consequently, 5G NR specifications have adopted stricter mechanisms to refresh users' temporary identifiers (such as 5G-TMSI) [10]. It significantly enhances privacy and security. However, Norbert et al. [43] proposed a new type of side-channel attack. Attacker generates covert traffic using instant messaging software associated with the victim's phone number (such as Signal, Telegram, etc.). Then attacker uses the 5G sniffer to capture all RNTIs in the cell and perform traffic analysis. By matching the analysis results with the sending frequency of covert messages, attacker can deduce the victim's RNTI and expose the location information of 5G users. This attack has been tested and proven feasible on commercial 5G networks.

(b) User data manipulation. PDCP sublayer in LTE only provides encryption for data plane data without offering integrity protection. It leads to ALTER attack and IMP4GT attack [52,55]. Therefore, in the design of 5G NR protocol, 3GPP has stipulated that integrity protection functionality for data plane must be mandatorily supported in both the UE and gNB, and UE needs to support integrity protection for data plane at any rate, including the maximum rate [10]. However, 3GPP specifications also clarify that integrity protection for data plane data between UE and gNB is optional. This means that the use of integrity protection functionality is determined by the operator during deployment. If the operator deploys a 5G network without enabling this security enhancement feature, manipulation attacks on the data plane remain feasible. Unfortunately, according to real network measurement results, some operators [23,72] did not enable data plane integrity protection when deploying 5G. Therefore, 5G is still highly susceptible to the threat of data plane manipulation attacks. For instance, recent research indicates that forging data plane signaling messages can cause severe damage. Attackers forge Buffer Status Report (BSR) to request uplink grants from gNB. Since uplink grants are allocated based on requests, malicious BSRs containing a large number of requests can waste licensed resources and block the uplink of any UE in the cell for hundreds of milliseconds [53]. What is worse, gNB cannot distinguish these attack messages from legitimate ones, and attackers can repeatedly forge such messages, thereby continuously consuming uplink channel resources. Research by Tan et al. [54] shows that attackers can disrupt the RLC control message which is Negative Acknowledgement (NACK), used to request the retransmission of certain packets. When the NACK is lost, the retransmission is delayed. Due to the RLC mechanism, all subsequent packets are blocked for hundreds of milliseconds. Attackers do not need a fake base station or channel interference. They only need to send a signal every few hundred milliseconds. In addition, without integrity protection, attackers can manipulate DNS requests to malicious web servers [52], and can also forge any encrypted data via MitM attacks [55].

Defenses. Currently, there are no suitable defense solutions for side-channel attacks that implement RNTI-related identity mapping. The best defense against data plane manipulation attacks is for operators to enable integrity protection for data plane data when deploying 5G. One of the operators' concerns is that enabling integrity protection for the data plane will incur additional overhead. It will increase

operational costs and degrade service quality. However, researcher [73] found through testing that enabling and disabling integrity protection result in only minor differences in network latency, with almost no impact on throughput. The result of real-world network testing showed an increase of about 10 ms in latency, with no differences observed between different integrity protection algorithms. The experimental results indicate that the overhead introduced by data plane integrity protection is acceptable compared to the security benefits. Meanwhile, in response to recently proposed data plane manipulation attacks, Tan et al. [54] designed a lightweight detection scheme named CellDAM, leveraging the fact that data plane attacks exhibit certain erroneous data signal behaviors. It can defend against certain attacks that current active defense schemes cannot. Once CellDAM detects an attack, it mitigates the damage by switching to another available channel.

5.3. Attacks on upper layers

This subsection describes existing attacks targeting the upper layers of 5G NR, including RRC sublayer and NAS sublayer. These two protocol sublayers, as the core protocols of the air interface control plane, jointly support the core functions of 5G NR and ensure the efficient operation of the air interface. NAS focuses on session management and mobility management, while RRC concentrates on the control of radio resources and the transmission of air interface resources. These two sublayers involve a large amount of important information and security functions related to user identity and network that are of interest to attackers. If there are vulnerabilities in the upper layers, they can lead to a multitude of serious attacks, such as DoS attack, downgrade attack, privacy leaks, MitM attack, etc.

(a) Attacks on RRC. RRC protocol provides services and functions such as radio connection management, system information broadcasting, paging, and UE measurement. However, due to the lack of protection for the broadcasting of system messages and the transmission of some RRC signaling messages, as well as conflicting expressions between protocols, RRC sublayer is susceptible to various attacks. For instance, system messages are broadcast in the open wireless environment in plaintext. Attackers can obtain network configuration parameter messages by using a 5G sniffer [43].

The air interface utilizes RRC signaling messages to perform various control functions, including the establishment, modification, and release of radio connections and bearers, key agreement for AS sessions, and UE measurements. Maliciously crafted RRC signaling messages can be used in various attacks, including measurement report injection and redirection attacks. For instance, research by Nie et al. [56] found that by broadcasting customized measurement reports over the wireless channel, it was possible to guide UE to perform an RRC reconfiguration, connecting to a target fake base station. Hussain et al. [57] proposed sending RRC reconfiguration messages with incorrect MAC to target UE via a fake base station. After receiving the RRC reconfiguration message, if UE cannot verify the integrity, UE will implicitly release the RRC connection and move to idle mode.

RRC protocol may have design flaws that can lead to attacks, such as conflicting expressions. These inconsistent designs may lead to incorrect implementations by operators and equipment manufacturers, resulting in security issues. For example, the article in [12] found conflicting descriptions of the NCC parameter related to AS security key agreement in 5G NR, leading to the current open-source implementations of 5G not being able to correctly check the NCC parameter and update it. Ishtiaq et al. [13] points out that the specification allows RRC setup messages without integrity protection to respond to RRC resume request messages [74], making it easy for attackers to craft plaintext RRC setup messages. When gNB detects an RRC resume message, gNB discards it and sends a plaintext RRC setup message to target UE. After receiving the message, UE deletes its RRC security context and releases the radio bearer, leading to the power exhaustion attack. According to RRC protocol, before the security context is established, UE transmits UE capability enquiry/information signaling messages, leading to exposure and tampering attacks on 5G UE device capabilities [56].

(b) Attacks on NAS. NAS protocol is used for communication between UE and AMF of the core network. It is the termination layer of 5G NR control plane in the air interface protocol stack. NAS is responsible for the mobility and session management functions of UE. Specifically, in mobility management, it conducts user identification, authentication, and security control through the AKA protocol. In session management, it is in charge of session bearer management, IP connection control, and slice selection. Similar to RRC, as a core protocol of the air interface control plane, NAS also attracts significant attention from attackers. Due to protocol design flaws and deployment implementation errors, NAS is highly susceptible to attacks. The two main vulnerabilities of NAS are attacks targeting identification and the AKA protocol, and attacks exploiting NAS signaling messages.

Attacks targeting identification and the AKA protocol. The core network uses SUPI to determine the identity of currently connected UE and employs the AKA protocol for mutual authentication and security protection negotiation with UE. In 4G and earlier, IMSI was transmitted in plaintext over the air interface, leading to the leakage of users' private information. 5G has made improvements to this issue by introducing an asymmetric encryption system to protect the SUPI. Before transmission, UE encrypts SUPI using the public key configured by the home network. This effectively addresses IMSI catching attacks that have existed since 2G. However, to support the protection of 5G user identifiers, the public key and protection mechanism identifier must be stored in USIM. Otherwise, UE could select the "NULL scheme" mechanism, in which case SUPI will not be encrypted and protected. Real network testing by Nie et al. [23] has shown that, due to improper configuration by some operators, UEs transmit SUPI using the null encryption scheme over the air interface. It makes IMSI capture attacks still feasible. The AKA protocol is used for mutual authentication and communication key negotiation. As a core part of mobile communication security, it has been continuously improved along with the updates and iterations of mobile communications and currently appears to be very comprehensive. However, according to scholarly research, the AKA protocol may have flaws that could lead to attacks. For example, a new logical vulnerability in the AKA specification was disclosed in the article [58], where the Sequence Number (SQN) protection mechanism can be compromised under specific replay attacks due to the use of xor and insufficient randomness. It can lead to further attacks such as location tracking.

Attacks exploiting NAS signaling messages. In LTE, some pre-authentication NAS signaling messages are permitted to be transmitted in plaintext. It allows attackers to launch various attacks by leveraging these signaling messages, particularly the *attach request* messages and *detach request* messages. Consequently, one of the security enhancements proposed for 5G includes the requirement to encrypt initial NAS messages. However, there are still issues with the implementation of security enhancements not being in accordance with specifications in actual deployments. For instance, the article in [23] points out that some operators have not implemented the encryption protection for initial NAS messages as specified. This can lead to the risk of DoS attacks [59] targeting NAS and the leakage of sensitive information such as 5G mobility management capabilities. Additionally, the article in [12] notes that due to conflicting expressions in the specifications, all open-source implementations of 5G accept unsecured authentication and identity request messages. Even after the establishment of a security context, attackers can exploit these messages for user fingerprinting, tracking, and DoS attacks. Ishtiaq et al. [13] reports the NAS count update attack, where due to a design flaw in the specifications. It allows UE to store the NAS count of the last message whose integrity has been checked, thus enabling UE to accept delayed and out-of-order receipt of NAS messages with integrity protection. It leads to NAS message replay attack. Exploiting NAS signaling messages can also

facilitate downgrade attack. For example, NAS reject message is used to deny UE attach to mobile networks when UE is not accepted by mobile networks. The reject message contains a specific cause, indicating how UE should proceed when being denied attachment by the network. When UE receives an unprotected reject message before the establishment of the security context, UE will accept these messages. It leads to downgrade attacks [60].

Defenses. To defend against attacks exploiting RRC messages, Hongil et al. [75] suggest reducing the value of the inactivity timer. After the establishment of the RRC security context, UE and gNB are allowed to send redirect commands, UE capability messages, and measurement report messages. This can address issues of redirection attacks, device capability disclosure, and location privacy leakage. To defend against attacks exploiting NAS signaling messages, operators shall correctly implement the encryption of initial NAS messages when deploying commercial 5G networks. Additionally, operators shall implement the encryption of SUPI to ensure the security of user privacy. At the same time, 3GPP needs to minimize inconsistencies and ambiguities in protocol design to reduce security issues that arise during device implementation and network deployment. In response, researchers have designed some automated tools for analyzing protocol flaws to help protocol designers better identify design issues. For example, Rahman et al. [12] designed and implemented CellularLint. It is the first tool for detecting inconsistencies in the context descriptions of 5G specifications. Ishtiaq et al. [13] designed and implemented Hermes, a framework for automatically extracting FSMs from mobile network specification documents.

5.4. Attacks on gNB

Research on 5G security often chooses to overlook attacks on the base stations themselves. The reason is that such attacks typically have little to do with the protocols and are more similar to traditional attacks on embedded systems. However, in fact, as the core nodes of RAN, all communication signaling and traffic between the UE and core network must pass through the base station. Thus, attacks on base stations have a significant threat in the real world, favored by attackers. There are currently two types of attacks on gNB, attacks against the base station device layer and attacks against the fronthaul network.

(a) Attacks against the base station device layer. The gNB is the core node in RAN. Once breached, all user data transmitted through this gNB will be at risk of eavesdropping, tampering, and falsification. For example, HatLab research team demonstrated remote penetration of multiple commercial base stations [61], by exploiting vulnerabilities at the device layer to remotely control the base stations and achieving the functionality of sniffing, hijacking, and tampering with data plane traffic. It indicates that commercial base stations are not completely secure and are also susceptible to attacks. Once a base station is compromised, the consequences can be substantial.

(b) Attacks against the fronthaul network. In addition to attacks on the base stations themselves, researchers have also disclosed vulnerabilities in the 5G fronthaul network [62]. A major trend in 5G networks is the decomposition and virtualization of functions in 5G RAN. For example, traditional RAN (such as 4G) with Baseband Unit (BBU) and Remote Radio Unit (RRU) is decomposed in modern 5G RAN into RU, DU, and CU. The fronthaul network transports session and control data between DU and RU. RU converts it into radio signals for transmission to UE. The 5G fronthaul network uses enhanced Common Public Radio Interface (eCPRI) based on the Ethernet [76]. The eCPRI is a protocol designed to improve performance and support emerging technologies such as massive MIMO [77]. Due to concerns that security mechanisms would increase processing latency, which could violate the strict performance requirements of the eCPRI protocol, the specification of 5G RAN stipulates that integrity protection for the fronthaul network is optional. This could lead to attacks. The paper [62] is the first to study the vulnerability of the fronthaul network lacking integrity protection and proposed two types of attacks, namely frontstorm attack and frontstrike attack. These attacks can be launched remotely from software, do not require a physical radio presence, and can affect a wide area. Specifically, the frontstorm attack introduces a signaling storm in CU, significantly degrading cell performance through fronthaul routing operations and request–response sample reuse. The attack will affect all DUs associated with this cell and their associated RUs and UEs. The frontstrike attack aims to disrupt the physical layer of the air interface. By adding a MitM on the fronthaul network, attackers only need to use packet capture and modification techniques to view and modify fronthaul communications to attack the fronthaul network. This requires no additional hardware or complex signal processing mechanisms. This could lead to the leakage of key information about the cell, degrade cell performance, or cause DoS attacks on all UEs in the cell. The frontstrike attack achieves goals and effects similar to traditional physical layer attacks (such as fake base station and signal jamming).

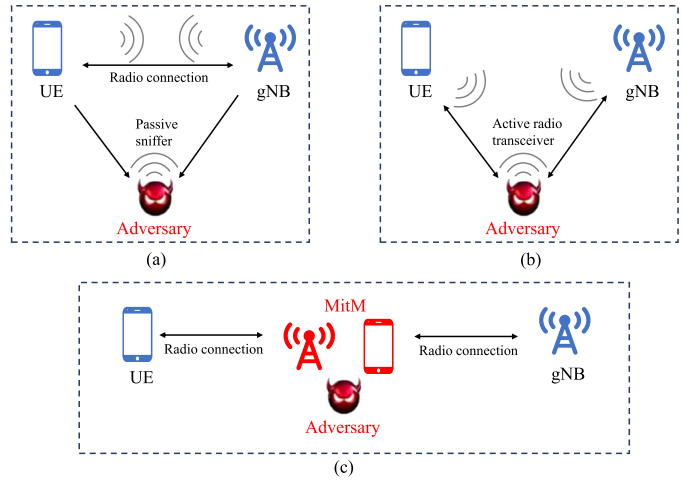

Fig. 5. Attacker models in 5G RAN: (a) passive attacker, (b) active attacker, and (c) MitM attacker.

Defenses. Vulnerabilities at the equipment layer of base station are usually caused by incorrect implementations by device manufacturers. A good defense solution is to conduct vulnerability detection tests on base stations, but there is currently a lack of research in this area. The security issues of the fronthaul network are mainly due to the protocol's lax security mechanisms. It requires relevant vendors and security standardization organizations to re-evaluate the importance of integrity protection for the fronthaul network.

5.5. Summary

Due to the openness and importance of RAN, it is the most studied among the mobile network, and it has also been disclosed the most security problems. Every layer of the protocol stack of 5G air interface and gNB were found to have security issues that led to attacks. These attacks include attacks on physical layer, attacks on layer two, attacks on upper layers, and attacks on gNB. Attacks on physical layer have little impact, but they are often the basis for advanced attacks. Attacks on layer two work primarily on the data plane, which results in eavesdropping, tampering, and forgery of user data. As the core control protocol of RAN, attacks on upper layers are usually the most harmful and the most widespread, which may lead to the DoS attack, MitM attack and downgrade attack. As a key node for data transmission in RAN, attacks on gNB are equally significant and can lead to eavesdropping, tampering, forgery, and other interference with communications. Attacks on RAN are usually employed in remote radio attack scenarios. Next, we introduce three main attack models, as shown in Fig. 5.

Passive attacker. Passive attacker plays the role of eavesdropper, capable of receiving, storing and decoding NR signals within a specific range, and further extracting relevant information without being detected. Moreover, passive attacker can passively sniff the transmission between the UE and the gNB in the air interface and obtain the content of unencrypted messages. For example, this attacker model can be used for eavesdropping attack on the NR physical layer.

Active attacker. In addition to the capabilities of the passive attacker, active attacker can also send radio signals of specific frequencies (for example, noise or spoofing signals) in open wireless channels. By taking advantage of this capability, adversary can launch radio jamming attacks in cellular networks, establish fake gNBs or UEs. For example, both radio jamming attacks and signal manipulation attacks at the physical layer employ the active attacker model.

MitM attacker. Based on the active attacker model, MitM attacker can simultaneously impersonate UE to the real network and gNB to 5G users. Therefore, MitM attacker can establish a controlled relay transmission between the victim UE and commercial mobile networks. The MitM attacker model is mainly used for user data manipulation attacks on the layer two of 5G and authentication relay attacks on the NAS layer.

Remediation. There are many types of attacks on RAN, and the reasons for these attacks are different. Most attacks are caused by protocol flaws or insecure design. Based on existing defense solutions, most attacks were theoretically remedied. There are a few that do not have good solutions right now. Future research is needed. This shows that these security problems which are theoretically fixed need to be verified in actual 5G networks, and the security of 5G RAN needs to be studied in depth.

6. Attacks on 5G core network

In LTE networks, the mobile core network is packaged as Physical Network Functions (PNFs) and deployed on custom hardware. In contrast, 5G networks leverage NFV and SDN technologies to transition from hardware-dependent infrastructure to software-based infrastructure. 5GC functions are virtualized and implemented on common X86 servers. 5G core network provides independent network slice services for uRLLC, mMTC, and eMBB application service by slicing a single physical network into multiple virtual networks. NFV technology is central to the implementation of 5G devices and services. It offers advantages in resource efficiency, flexibility, and availability. But the sharing of physical networks and hardware server resources (such as CPU and memory) makes the core network relatively susceptible to load attacks on physical shared hardware resources, unauthorized access to network slices and shared resources, distribution of malicious code through shared resources, and configuration errors in virtualization management software. This section introduces existing attacks on 5GC, mainly divided into four categories, attacks on network slice, access control mechanism defects, attacks from open API, and flaws in cryptography. The specific implications, impacts, causes, and existing defense solutions for each type of attack are summarized in Table 4.

6.1. Attacks on network slicing

Network slicing is a new technology introduced in 5G networks. By utilizing network slicing, 5G Mobile Network Operators (MNOs) can create different virtual network slices on a single physical network to support various types of services with different QoS metrics. A network slice is an end-to-end virtual network that spans RAN and 5GC, used for data transmission between UE and external data networks. Network slicing technology has significant advantages in terms of flexibility and resource utilization efficiency. And it can meet the diverse demands arising from different 5G application scenarios. However, if network slices for each service are not properly isolated, it is possible to attack one slice from another. For example, attackers could launch a network slice resource exhaustion attack by maliciously stretching the traffic capacity of a dedicated network slice for a particular service, thereby affecting QoS of other network slices. Alternatively, attackers might eavesdrop on or tamper with data belonging to other slices through unauthorized access. Attacks on network slicing are the most common attack targeting 5GC. We introduce the possible attacks on the deployment and operation of slices.

(a) Attacks on slice deployment. One of the innovations of 5G network slicing is that NFs can be flexibly configured according to the needs of application scenarios. However, flexible configuration of NFs can also lead to many security issues. 3GPP briefly defines the NF registration process in TS 23.502 [78]. When a new NF wants to join 5GC, it needs to initiate the registration process with NRF. An NF must provide its service information, such as the NF type, NF instance ID, and NF IP address, to the NRF based on the specified network service profile. The network service profile can be regarded as an NF registration template. In SBA, NFs of 5GC control plane communicate with each other through the service based interface (SBI) based on TCP/HTTP 2.0. It means that the NF registration information may be transmitted in clear text, and there is a risk of data leakage [79]. If this data is leaked, corresponding NF may be subjected to malicious attacks after registration. In addition, attackers can use this information to forge the NF and initiate registration operations with NRF, which causes greater harm. After closing its own business, NF shall initiate a deregister request to NRF. After receiving the request, NRF deletes the configuration data related to this NF. Incomplete data deletion related to deregistering NF may result in data leakage [80]. Residual NF configuration information may affect NRF running. In addition, if residual data is leaked, it can lead to the NF forgery attack.

(b) Attacks on slice operation. When a 5G slice is activated and instantiated, the slice enters its service phase. During this period, a large amount of slicing operation data is generated, accompanied by frequent access interface actions. Single Network Slice Selection Assistance Information (S-NSSAI) is used to uniquely identify a network slice. A collection of one or more S-NSSAI is called Network Slice Selection Assistance Information (NSSAI). TR 33.811 [81] states that if the confidentiality of NSSAI is not guaranteed, the network slicing service will be at risk of data leakage and the MitM attack may occur during the connection establishment phase. There is also a data tampering attack against NSSAI. The attacker tampers with the rejected NSSAI so that the slice that need to be revoked remain inaccessible, even if the user has legitimate access to the slice. In 5G networks, the process of switching active sessions between users and external data networks from one network slice to another is referred to as inter-slice mobility (ISM). ISM can be initiated by either the MNO or the UE [88]. Vipin et al. [82] proposes a Distributed Slice Mobility (DSM) attack targeting ISM in 5G networks. DSM attacks means that attackers control compromised UEs to launch many ISM requests against network slices of the 5G network. DSM attacks may result in Distributed Denial-of-Service (DDoS) attacks on control plane functions responsible for network slice selection and PDU session establishment, such as the AMF and the SMF. By directing compromised UEs to shift to the same slice, attackers can also cause fluctuations in traffic load and a degradation of QoS on the target network slice. It leads to performance and economic losses.

Defenses. For attacks on network slicing. The best defense solution is to develop standardized data encryption and protection algorithms during the deployment and management of the network slice. Secondly, for the sensitive data of the network slice (slice identifier, slice decommissioning data, etc.), operators can selectively meet user requests. What is more, to counter DSM attacks, researchers have proposed defense solutions including the construction of backup network slices, the establishment of ISM request thresholds, and detection mechanisms [82].

Table 4
Threats and attacks on 5GC.

Classifications		Implications	Causes	Defense solutions
Attacks on network slicing	Attacks on slice deployment [78–80]	• NF forgery attack • Data leakage	C1-The NF registration mechanism is flawed	• Develop standardized data encryption and protection algorithms • Build a backup network slice • Establish the ISM request threshold mechanism
	Attacks on slice operation [81,82]	• DDoS attack • Data leakage • MitM attack	• C1-The specification is flawed	
Access control mechanism defects [83,14]		• Access unauthorized NFs • DoS attack • On-path attack • Leakage of user private data	• C1-The access control mechanism design of 5GC has some defects	• Analyze the access control mechanism of the core network
Attacks from open API [84–86]		• Leakage of privacy data and 5GC intranet address • DoS attack • Arbitrary code execution	• C2-Operators do not deploy the security mechanism according to the standard	• Operators correctly deploy the security mechanism of the open API of 5GC • Security check continuously during the development and service process
Flaws in cryptography [87]		• Predictable TMSI • 5GC security mechanism is damaged	• C2-Insecure password algorithms and configurations are used in network deployment	• Operators use static program analysis tools to analyze the security of 5GC

6.2. Access control mechanism defects

To achieve large-scale communication, faster data transmission rates, ultra-low latency, and diverse applications, 5GC has introduced SBA. The introduction of SBA decomposes 5GC into multiple NFs, with each NF responsible for a specific set of related services. Since NFs contain sensitive information of users and 5G networks, access control for NFs is a necessary condition to ensure secure interactions between users and 5G networks. 3GPP has adopted the industry-standard authorization framework called OAuth 2.0 as the foundation for access control mechanisms among NFs in 5GC [10]. However, OAuth 2.0 is a generic authorization framework, and its integration into 5GC design has not been formally verified for security.

Research indicates that there are security vulnerabilities in the access control mechanisms of 5GC. Mujtahid et al. [83] identified five attacks targeting access control mechanism flaws in 5GC, which are confused producer attack, token reuse attack, default over-privileged attack, authorization bypass attack, and parameter misuse attack. In 5GC, access permissions are different between NFs in different network slices. But through the aforementioned attacks, attackers can bypass access control mechanisms to access unauthorized NFs, and even NFs in different network slices. Seaver et al. [14] proposes two attacks caused by over-privileged on the core network. One is the AMF Re-Allocation attack, where the protocol allows SMF or PCF to initiate a UE release command to switch service for this UE to another AMF. Attackers may leverage this excessive privilege to switch this UE to their controlled network slice. It leads to DoS attacks or on-path attacks. The other is subscription data management exposure, where sensitive UE subscription information is exposed to NFs other than UDM. The access control policy for the "nudm-sdm" service allows any NFs to read the subscription data of any public UE, which could lead to potential privacy violations.

Defenses. In view of the vulnerabilities of the 5GC access control mechanism, a good solution is to conduct a comprehensive security analysis of the access control mechanism of 5GC to find out the security problems. There is already some work that contributes to it. Mujtahid et al. [83] proposes the first extensible formal model for the 5GC access control mechanism. And it introduces a confrontational control framework called 5GCVerif to conduct a systematic formal analysis of the access control mechanisms in 5GC. It can discover security vulnerabilities of protocols through formal analysis. Seaver et al. [14] creates a program analysis framework named 5GAC-Analyzer to analyze the implementation of access control policies of 5GC. 5GAC-Analyzer is a collection of CodeQL queries and Python scripts. It can extract the implementation details of access control mechanisms and compare them with the OAuth rules in 3GPP specifications.

6.3. Attacks from open API

From 2G to 4G, internal communication functions, service management, and applications in the core network were developed under the control of operators, with devices interoperating through Peer to Peer (P2P) interfaces. However, in 5G, interoperability between devices uniformly adopts HTTP-based web interfaces. 3GPP has added the Network Exposure Function (NEF) to 5GC to interact with third-party service providers. It acts as an interface between 5G networks and external entities, providing API-based access to network resources [89]. Open APIs provide internal communication service functions and data access for facilitators in vertical industries such as the IoT and industrial automation. These APIs are known as the Front Door. Compared to IP networks, mobile networks are relatively closed, making it difficult for hackers to access the core network of mobile operators. But the internet web technologies used in 5G SBA are familiar to attackers, and web application services still have many security vulnerabilities. These APIs could become a new target for attackers.

NEF opens 5GC network capabilities to third-party applications, enabling a connection between network capabilities and business needs. Thus, service experience can be improved and network resource allocation can be optimized. The security of NEF's APIs is the foundation of 5GC's open network capability. It also affects that the interaction process faces security issues such as data leakage, unauthorized access, packet hijacking, DoS, and shared data tampering. When 5GC is virtualized in the cloud, many security issues related to remote management become particularly prominent. Ling Shu et al. [84] pointed out that the cloud-based 5GC adopts many open APIs, which makes it easier for attackers to use vulnerabilities and backdoors to access unauthorized resources and illegally consume more resources. In addition, attackers can also carry out various attacks on network slicing by manipulating, managing and modifying interfaces [85].

5G IoT devices in smart factories, smart homes, and smart healthcare rely on a single SIM card of IoT to connect to 5GC via base stations. Their data and privacy information are typically stored in the cloud, and the data from these IoT devices may be exposed through APIs provided by IoT service platforms. Shaik et al. [86] disclosed five API

vulnerabilities in IoT service platforms. These vulnerabilities could lead to DoS attacks, privacy data leaks, disclosure of internal addresses of 5GC, or even arbitrary code execution. According to the security design of the protocol specifications, OAuth and TLS are used in 5GC to ensure access control and data confidentiality. However, Shaik et al. [86] investigated nine platforms, of which only five used OAuth and TLS, and found code injection vulnerabilities in many platforms. It is evident that whether operators can correctly deploy security mechanisms is also a non-negligible security issue.

Defenses. The security assurance of open APIs of 5GC should start from the design of 5G networks and continue with ongoing security checks throughout the development and service process. The main problem is that 3GPP specification is not clear about the security part of open APIs. It leads to security issues during deployment. 3GPP specifications should introduce new web security mechanisms and design more secure standards to protect these open HTTP-based APIs. In addition, operators need to consider the deployment of appropriate security protection when deploying APIs.

6.4. Flaws in cryptography

Ensuring the security of mobile communications is a multifaceted challenge. It requires protecting various information from user devices to the core network. Cryptography is one of the cornerstones of ensuring the security of mobile communications. To address the risks of eavesdropping and tampering brought by the openness of the air interface channel, 3GPP specification considers wireless encryption. Bidirectional authentication and data transmission in the core network also employ cryptographic mechanisms. Therefore, the presence of cryptographic and random number deficiencies in 5GC is a security issue worth investigating, which directly threatens user authentication and data confidentiality. However, due to the traditional opacity of mobile infrastructure, there has been relatively little research considering cryptographic technologies in the mobile core network to date.

The industry commonly adopts open-source implementations, packaging NFs into their products. Current 5G dedicated network deployments [90,91] have begun to increasingly adopt open-source mobile cores, and operators have sponsored several open-source mobile core projects. Therefore, by studying the deficiencies in cryptography and security randomness in open-source mobile cores, we may discover relevant security issues in downstream projects and actual deployments. It can help operators to fix them. Virgil et al. [87] reports on existing cryptographic and random number deficiencies in open-source 5G core projects, such as in OAI-5G [92] and free5GC [93], where the use of predictable seeds for PseudoRandom Number Generator (PRNG) algorithms and insecure PRNG algorithms results in predictable TMSIs. It could lead to TMSI tracking attacks. TLS certificate and hostname verification cannot be enabled in OAI-5G and free5GC, even if the core network is configured to enforce TLS. It could lead to session hijacking or an on-path attack.

Defenses. For the cryptographic defects in 5GC, a good solution is to use the method of code analysis to carry out security analysis on the implementation of 5GC. For instance, Bennett et al. [87] designed 13 CodeQL static program analysis rules and implemented a tool called CellCrypt for analyzing cryptographic defects in mobile cores, which helps researchers better analyze cryptographic security in mobile cores.

6.5. Summary

The core network of the previous generation mobile networks is relatively closed and not open to outside. 5G introduces SBA and network slicing. On this basis, 5G provides external services through HTTP-based APIs. While bringing convenience, these new designs brought new security issues, including attacks on network slicing, access control mechanism defects, attacks from open API, flaws in cryptography.

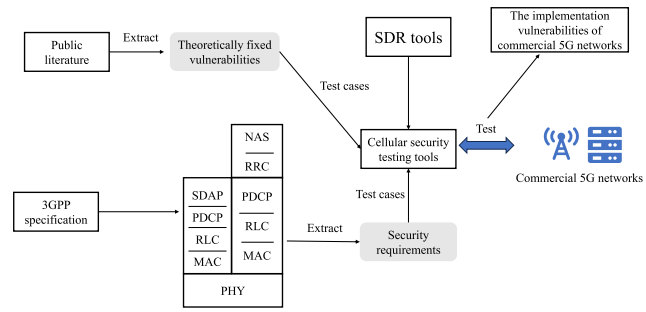

Fig. 6. Systematic security testing tools for mobile network.

There are mainly two attack scenarios for 5GC. One is to trigger the attack by sending signaling to the core network through RAN. Most of the attacks on network slicing are carried out in this way. The second is to directly attack 5GC through open APIs or by controlling a core network element. The core network acts as the data center and control center of the mobile network. So, any attack on the core network may cause a wider impact and greater harm than attacks mentioned in Sections 4 and 5.

Remediation. Attacks on 5GC are mostly caused by protocol flaws and unclear protocol descriptions. It requires 3GPP to further design more secure mechanisms. Operators need to pay more attention to the security of open APIs. 5GC introduces many new technologies, which bring many benefits, but also security risks. Researchers need to further study the security of 5GC to ensure the security of future mobile networks.

7. Advice for future work

Many countermeasures have been proposed in the literature of mobile network security, and several protocol security enhancements and improvements have been adopted in the 3GPP specifications, in order to defend against various attacks on mobile networks. Most attacks have been theoretically addressed. However, it cannot be denied that there are still some intractable security issues, as well as potential security problems that have not yet been disclosed or discovered. Further research is needed to address the remaining and potential security issues to strengthen and ensure the security of future mobile networks. For this purpose, this section proposes three suggestions for future research directions. First, to verify whether the security issues theoretically resolved and those caused by implementation errors have been genuinely resolved in practice, there is a need for research on a systematic security testing tool for diagnosing mobile terminals and operator mobile networks. Second, with the development of mobile networks, 5G system has become very large and complex. As a result, manual auditing standards and analysis of security problems are faced with the problem of inefficiency and high cost. It necessitates the research on an automated security analysis tool for mobile network specifications. Third, 5G system has introduced many new designs and elements, such as NFV and IoT devices, which bring entirely new attack surfaces and security issues. There is a need to focus on the security analysis of these new parts to ensure the security of current and future 5G networks.

7.1. Systematic security testing tools for mobile network

Based on the investigation results of existing attacks on 5G as discussed earlier, the majority of known attacks are caused by specification flaws in 5G SA (C1) or implementation vulnerabilities by equipment manufacturers and operators (C2). Attacks resulting from specification flaws can mostly be mitigated or completely fixed in theory through corresponding defense solutions or modifications to

3GPP specifications. And those caused by vulnerabilities in network deployment and device implementation require corresponding remediation measures from network operators and equipment manufacturers. Both types of attacks face the same issue, which is the need to confirm their actual remediation status in real networks. What is more, for most of the attacks proposed in existing research articles, their real-world verification and repair have only been conducted in certain specific countries and regions where the authors are based, and have not covered all commercial networks and terminal devices worldwide. Therefore, relevant devices in other regions may have the same security issues and are susceptible to these attacks. Additionally, some mitigation measures have only been proposed in theory, and it is unclear whether the affected devices have been correctly patched with security updates in actual mobile networks and what the effectiveness of these patches is.

In 4G era, many researchers have leveraged the flexible and available SDR tools to build test platforms for communication with mobile networks. A similar approach can be taken for testing 5G networks, as shown in Fig. 6. After conducting an in-depth investigation of the existing 5G network attacks, effective test cases can be extracted from the open literature related to these attacks. In addition, we can modify the protocol procedure of the open mobile network system (such as srsRAN [35], OAI-5G [92]) to implement the test cases and test the target 5G network. It can verify whether the target 5G network is vulnerable to relevant attacks.

Therefore, it is feasible and meaningful to develop a cellular security testing tool aimed at testing known but not properly fixed vulnerabilities in current 5G networks by utilizing open-source SDR systems as basis. The testing tool can cover the verification of all security flaws exploited by existing attacks and should be capable of updating the verification of newly exposed security vulnerabilities. However, the main difficulty is the lack of SDR tools that can access commercial 5G networks. This article provides a detailed investigation of the attacks on 5G SA. It can be used as a relatively complete test case set. Once the open source SDR tool that can access commercial 5G networks is available, systematic security testing tools for mobile networks can be implemented.

7.2. Automated security analysis tools for mobile network specifications

3GPP designs, creates, and maintains technical specifications for mobile network systems used by global network operators and equipment manufacturers. These specifications are quite lengthy. And These specifications are developed by many members together and described in natural language. They are scattered across hundreds of technical documents and improved through subsequent releases and change requests. This results in mobile network protocol specifications evolving over the years into a large and complex set of specification documentation. The complexity of specifications leads to three issues. First, specifications are so vast and dispersed that creating formal models required for security analysis is very laborious and often prone to error. It is not conducive to finding security vulnerabilities in the protocols. Second, the natural language used in the specifications, due to its inherent ambiguity and complexity, often leads to misunderstandings among developers. It results in deviations in implementation and exploitable flaws [30,94,75,31]. Third, after years of changes, revisions, and evolution, specification documents have introduced some different descriptions, and inconsistencies in the documentation regarding certain situations and undefined behaviors can lead to serious defects in implementation. Therefore, there is a need to develop an automated tool for analyzing the security of mobile network specifications. It can directly translate ambiguous natural language into formal models for security analysis and perform security analysis on the formal models, in order to enhance the security of future mobile network specifications.

In recent years, the rapid development of NLP technology and LLM technology has made it possible to develop tools for automatically analyzing the security of mobile network specifications. Existing NLP technology can be used to attempt to extract formal models required for security analysis, such as FSMs, from the natural language text of mobile network specification documents. Then, formal verification methods can be applied to analyze the security of the protocols, and the analysis results can be experimentally verified using easily constructed open-source SDR systems. By developing a tool that automates the aforementioned steps, the efficiency of future mobile protocol security analysis will be significantly improved, ensuring the security of future mobile networks.

Many researchers have actively explored this direction. For example, Chen et al. [95] used NLP technology to extract security-related event dependencies from 3GPP documents, constructing event dependency graphs and target event chains to verify whether the implementation of terminal devices complies with 3GPP specifications. Rahman et al. [12] implemented a tool that can use NLP technology to identify inconsistency problems described in 3GPP documents. Ishtiaq et al. [13] designed the first framework to extract FSMs from the natural language text of mobile network specifications, conducting experiments on 4G NAS, 5G NAS, and 5G RRC specifications with an overall accuracy of approximately 81%. According to their work, NLP technology can assist us in conducting security analysis of mobile network protocols. The model can generate FSM, which saves a lot of time that requires the work of human experts. However, these efforts have limitations. The work of Chen et al. [95] and Rahman et al. [12] did not attempt to extract FSMs, and the work of Ishtiaq et al. [13] cannot identify implicit defects and inconsistencies in specifications.

At present, the main difficulties in this direction are the lack of training sets and insufficient model capabilities. Advanced NLP technology allows us to train an end-to-end neural network model to extract FSMs directly from text. However, there is a lack of sufficient text training set of mobile network domain knowledge. In this regard, Ishtiaq et al. [13] proposes a method for extracting FSMs in three steps. Although this reduces the dependence on the training set, it also reduces the accuracy of NLP model. In addition, NLP models which are currently studied face the problem of insufficient capacity. We recommend introducing advanced LLM to improve the capabilities of analytical tools. LLM supports multi-modal inputs and has more training parameters. With LLM fine-tuning techniques, LLM may exhibit stronger protocol text analysis capabilities. NLP technology can greatly enhance the efficiency of mobile network security analysis. We believe this is an important direction that needs to be studied in the future. It is necessary to continuously research and develop a tool for automatically analyzing the security of mobile network protocols.

7.3. Identifying security vulnerabilities and defects in 5G new designs

The 5G network is characterized by ultra-high bandwidth, ultra-many connections, and ultra-low latency. 5G represents an all-around enhancement compared to 4G. To achieve these features, many innovative technologies have been introduced in 5G mobile networks, aimed at improving network performance, enhancing connectivity, and supporting new application scenarios, such as network slicing technology, HetNet, SBA, Massive MIMO, and Mobile Edge Computing (MEC). While these technologies bring many advantages, they may also introduce new security vulnerabilities and defects. For instance, 5GC has adopted NFV and SDN technologies to implement network slicing, enhancing the flexibility and scalability of core network deployment and allowing the construction of specific network slices based on application scenario needs. However, it also brings new security risks. Implementing NFV technology on general-purpose servers, if not properly controlled in terms of virtual machine hypervisor security, malicious virtual machine migration issues, changes or authentication of applications running on virtualized network functions, and authorization of network functions, is likely to result in security problems. Without protection mechanisms for application authentication

and authorization, malicious third-party applications can obtain network information from the SDN controller [96]. To better integrate with the IoT and industrial sectors, 5G has opened directly accessible APIs in 5GC. With the increase in devices and 5G application scenarios, IoT devices in smart factories, smart homes, and smart healthcare rely on a single SIM card of IoT to connect to the 5G CN through base stations. And their core data typically stores in the cloud, and the data from these IoT devices may be exposed through APIs which are exposed by IoT service platforms [86]. 5G has introduced MEC to reduce latency and improve data processing efficiency, but the deployment of MEC nodes may face attacks such as identity authentication and authorization bypass, edge infrastructure attacks, edge data attacks, and MEC application attacks.

Overall, the architecture of 5G networks is largely a continuation of 4G. Most of the technologies and protocols used in 5G have undergone continuous security analysis and research since 2G era, and continuously improved and optimized in the process. Therefore, their security is considered to be relatively higher compared to the new technologies introduced in 5G. The introduction of 5G new technology undoubtedly brings many advantages and benefits, but there may also be many unknown security vulnerabilities and flaws. Compared with other parts, 5GC is the one with the most improvements in the 5G network. The deployment of 5GC has become virtualized and cloud-based. The network elements in the core network are becoming virtualized software. Moreover, unlike the previous generation of networks, 5GC opens its interfaces to the outside world. These improvements have all introduced new attack surfaces, and researchers have already discovered some security vulnerabilities in them. Furthermore, the openness of 5GC makes it easier for researchers to access it. Therefore, researchers should conduct in-depth security analyses on these new technologies, especially those related to 5GC, identify and solve these security issues to ensure the secure and stable operation of future mobile networks.

8. Conclusion

The paper provides a comprehensive perspective on attacks and related security issues on 5G SA. We propose a methodology to study existing attacks targeting different parts (UE, RAN, core network) of 5G SA. Following this methodology, we conduct a thorough research on known attacks in three steps. First, we classify existing threats and attacks for each part, discussing their impacts, defense solutions, and causes. Then, by further analyzing the existing mitigation measures proposed in 3GPP specifications and academic literature for these security issues, we determine the current remediation status for these security issues. We systematically sorted out the attacks on 5G SA, providing a comprehensive security perspective for 5G security researchers and professionals. Finally, based on the current remediation status for each security issue, we propose three potential research directions to enhance the security of 5G mobile networks. We suggest the necessity of developing a security testing tool to systematically check whether theoretically resolved security issues are correctly implemented in actual 5G networks. We recommend the development of an automated security analysis tool for mobile network protocols to better discover security flaws within them. We advise focusing research efforts on the new designs of 5G, as these entirely new designs are more likely to introduce new security defects.

The three potential research directions proposed in this paper have guiding roles in two aspects for the development of the 5G security ecosystem. The first is to provide research directions for 5G security researchers. The development of 5G security testing tools can fill the verification gap between theoretical protection and actual deployment. The research on automated protocol analysis tools can break through the limitations of traditional manual auditing and provide new ideas for the application of cutting-edge methods such as NLP in mobile communication security. Focusing on the exploration of security flaws in 5G new design can proactively identify unknown risks in innovative functions, such as network slicing, and guide the construction of a more secure 5G specification. The second is to assist professionals in enhancing 5G security. Through security testing tools, operators can conduct compliance checks on network configurations, to prevent the exploitation of fixed vulnerabilities due to implementation omissions. Operators and equipment manufacturers can efficiently detect protocol stack vulnerabilities with the help of automated analysis tools. The combination of these two dimensions can systematically enhance the security of 5G networks from technical standards to commercial applications.

Based on the investigation results, we conclude that various unresolved security threats still exist in every part of 5G networks. Continuous 5G security research is necessary in the future to enhance the security of mobile networks.

CRediT authorship contribution statement

Mengyi Gong: Visualization, Writing – original draft, Methodology, Conceptualization, Investigation. **Ziling Wei:** Writing – review & editing, Supervision, Conceptualization, Visualization, Funding acquisition. **Shuhui Chen:** Resources, Writing – review & editing, Funding acquisition. **Wanrong Yu:** Funding acquisition, Writing – review & editing. **Fei Wang:** Funding acquisition, Resources.

Declaration of competing interest

The authors declare that they have no known competing financial interests or personal relationships that could have appeared to influence the work reported in this paper.

Acknowledgments

This work was supported by the National Natural Science Foundation of China (No. 62202486 and U22B2005), the Key Research and Development Project of Jiangsu Province, China (No. BE2023004-4), the science and technology innovation Program of Hunan Province, China (No. 2024RC3139).

Data availability

No data was used for the research described in the article.

References

[1] T.D.I. Alliance, 5G industry and market development report, 2024, URL https://tdia.cn/Uploads/Editor/2024-04-28/662e0ae5e5132.pdf.
[2] GSMA, The mobile economy China 2024, 2024, URL https://www.gsma.com/solutions-and-impact/connectivity-for-good/mobile-economy/wp-content/uploads/2024/03/Mobile-Economy-Report-China-2024_English.pdf.
[3] 3GPP, TR38.801: Radio Access Architecture and Interfaces, 3rd Generation Partnership Project (3GPP), 2017.
[4] H. Kim, 5G core network security issues and attack classification from network protocol perspective, J. Internet Serv. Inf. Secur. (2020) 1–15.
[5] T. Madi, H.A. Alameddine, M. Pourzandi, A. Boukhtouta, NFV security survey in 5G networks: A three-dimensional threat taxonomy, Comput. Netw. 197 (2021) 108288, http://dx.doi.org/10.1016/j.comnet.2021.108288, URL https://www.sciencedirect.com/science/article/pii/S1389128621003066.
[6] J.D.V. Sánchez, L. Urquiza-Aguiar, M.C.P. Paredes, D.P.M. Osorio, Survey on physical layer security for 5G wireless networks, Ann. Telecommun. (2021) 155–174.
[7] M. Harvanek, J. Bolcek, J. Kufa, L. Polak, M. Simka, R. Marsalek, Survey on 5G physical layer security threats and countermeasures, Sensors (2024) 5523.
[8] S. Gao, R. Lin, Y. Fu, H. Li, J. Cao, Security threats, requirements and recommendations on creating 5G network slicing system: A survey, Electronics (2024) 1860.
[9] S. Sullivan, A. Brighente, S. Kumar, M. Conti, 5G security challenges and solutions: A review by OSI layers, IEEE Access (2021) 1.
[10] 3GPP, TS33.501: Security Architecture and Procedures for 5G System, 3rd Generation Partnership Project (3GPP), 2019.

[11] K. Tu, A.A. Ishtiaq, S.M.M. Rashid, Y. Dong, W. Wang, T. Wu, S.R. Hussain, Logic gone astray: A security analysis framework for the control plane protocols of 5G basebands, in: 33rd USENIX Security Symposium, USENIX Security 24, USENIX Association, Philadelphia, PA, 2024, pp. 3063–3080, URL https://www.usenix.org/conference/usenixsecurity24/presentation/tu.

[12] M.M. Rahman, I. Karim, E. Bertino, CellularLint: A systematic approach to identify inconsistent behavior in cellular network specifications, in: 33rd USENIX Security Symposium, USENIX Security 24, USENIX Association, Philadelphia, PA, 2024, pp. 5215–5232, URL https://www.usenix.org/conference/usenixsecurity24/presentation/rahman.

[13] A.A. Ishtiaq, S.S.S. Das, S.M.M. Rashid, A. Ranjbar, K. Tu, et al., Hermes: Unlocking security analysis of cellular network protocols by synthesizing finite state machines from natural language specifications, in: 33rd USENIX Security Symposium, USENIX Security 24, USENIX Association, Philadelphia, PA, 2024, pp. 4445–4462, URL https://www.usenix.org/conference/usenixsecurity24/presentation/al-ishtiaq.

[14] S. Thorn, K.V. English, K.R.B. Butler, W. Enck, 5GAC-analyzer: Identifying over-privilege between 5G core network functions, in: PROCEEDINGS of the 17TH ACM CONFERENCE on SECURITY and PRIVACY in WIRELESS and MOBILE NETWORKS, WISEC 2024, Assoc Comp Machinery; ACM SIGSAC; ACM SIGMOBILE, 2024, pp. 66–77, http://dx.doi.org/10.1145/3643833.3656134, 17th ACM Conference on Security and Privacy in Wireless and Mobile Networks (WiSec), Seoul, SOUTH KOREA, MAY 27–29, 2024.

[15] C. Merlin, R. David, P. Christina, H. Thorsten, 5G SUCI-catchers: Still catching them all? in: Proceedings of the 14th ACM Conference on Security and Privacy in Wireless and Mobile Networks, WiSec '21, Association for Computing Machinery, New York, NY, USA, 2021, pp. 359–364, http://dx.doi.org/10.1145/3448300.3467826, URL https://doi.org/10.1145/3448300.3467826.

[16] F. Karimi, X. Xing, X. Gong, E. Rodionov, Over the air, under the radar: Attacking and securing the pixel modem, 2023, URL https://www.blackhat.com/us-23/briefings/schedule#over-the-air-under-the-radar-attacking-and-securing-the-pixel-modem-33009.

[17] M. Grassi, X. Chen, Over the air baseband exploit:Gaining remote code execution on 5G smartphones, 2021, URL https://www.blackhat.com/us-21/briefings/schedule#over-the-air-baseband-exploit-gaining-remote-code-execution-on-g-smartphones-23199.

[18] G.M. Køien, On threats to the 5G service based architecture, Wirel. Pers. Commun.: An Int. J. (2021) 97–116.

[19] R. Mumford, NGMN shares executive version of 5G white paper, Microw. J. (2015) 55–56.

[20] C. Yu, S. Chen, Z. Wei, F. Wang, SecChecker: Inspecting the security implementation of 5G commercial off-the-shelf (COTS) mobile devices, Comput. Secur. 132 (2023) 103361, http://dx.doi.org/10.1016/j.cose.2023.103361, URL https://www.sciencedirect.com/science/article/pii/S0167404823002717.

[21] J. Zhao, B. Ding, Y. Guo, Z. Tan, S. Lu, Securesim: Rethinking authentication and access control for SIM/eSIM, in: Proceedings of the 27th Annual International Conference on Mobile Computing and Networking, MobiCom '21, Association for Computing Machinery, New York, NY, USA, 2021, pp. 451–464, http://dx.doi.org/10.1145/3447993.3483254, URL https://doi.org/10.1145/3447993.3483254.

[22] Z. Cui, B. Cui, L. Su, H. Du, H. Wang, J. Fu, Attacks against security context in 5G network, in: Mobile Internet Security, Springer Nature Singapore, 2023, pp. 3–17.

[23] S. Nie, Y. Zhang, T. Wan, H. Duan, S. Li, Measuring the deployment of 5G security enhancement, in: Proceedings of the 15th ACM Conference on Security and Privacy in Wireless and Mobile Networks, WiSec '22, Association for Computing Machinery, New York, NY, USA, 2022, pp. 169–174, http://dx.doi.org/10.1145/3507657.3528559, URL https://doi.org/10.1145/3507657.3528559.

[24] R. Weinmann, Baseband attacks: Remote exploitation of memory corruptions in cellular protocol stacks, in: E. Bursztein, T. Dullien (Eds.), 6th USENIX Workshop on Offensive Technologies, WOOT'12, August 6–7, 2012, Bellevue, WA, USA, Proceedings, USENIX Association, 2012, pp. 12–21, URL http://www.usenix.org/conference/woot12/24-baseband-attacks-remote-exploitation-memory-corruptions-cellular-protocol.

[25] A. Cama, A walk with Shannon-a walkthrough of a pwn2own baseband exploit, 2018, URL https://downloads.immunityinc.com/infiltrate2018-slidepacks/amat-cama-a-walk-with-shannon/presentation.pdf.

[26] N. Golde, There's life in the old dog yet:Tearing new holes into intel/iphone cellular modems, 2018, URL https://comsecuris.com/blog.

[27] N. Golde, Breaking band, 2016, URL https://comsecuris.com/slides/recon2016-breaking_band.pdf.

[28] R.-P. Weinmann, Baseband exploitation in 2013:Hexagon challenges, 2013, URL https://comsecuris.com/slides/rpw-pacsec2013-hexagon.pdf.

[29] 3GPP, 3GPP partners, 2024, URL https://www.3gpp.org/about-3gpp/partners.

[30] S.R. Hussain, I. Karim, A.A. Ishtiaq, O. Chowdhury, E. Bertino, Noncompliance as deviant behavior: An automated black-box noncompliance checker for 4G LTE cellular devices, in: CCS '21: Proceedings of the 2021 ACM SIGSAC Conference on Computer and Communications Security, 2021.

[31] C. Park, S. Bae, B. Oh, DoLTEst: In-depth downlink negative testing framework for LTE devices, in: The 29th USENIX Security Symposium, Security, 2022.

[32] I. Lozano, R.P. Jover, Hardening cellular basebands in Android, 2023, URL https://security.googleblog.com/2023/12/hardening-cellular-basebands-in-android.html.

[33] E. Bitsikas, S. Khandker, A. Salous, A. Ranganathan, R. Piqueras Jover, C. Pöpper, UE security reloaded: Developing a 5G standalone user-side security testing framework, in: Proceedings of the 16th ACM Conference on Security and Privacy in Wireless and Mobile Networks, WiSec '23, Association for Computing Machinery, New York, NY, USA, 2023, pp. 121–132, http://dx.doi.org/10.1145/3558482.3590194, URL https://doi.org/10.1145/3558482.3590194.

[34] S. Lee, Open5GS, 2024, URL https://github.com/open5gs.

[35] srsRAN, Open source SDR 4G/5G software suite from software radio systems (SRS), 2024, URL https://github.com/srsran.

[36] W. Li, H. Wen, Z. Lin, BaseMirror: Automatic reverse engineering of baseband commands from Android's radio interface layer, in: Proceedings of the 2024 ACM SIGSAC Conference on Computer and Communications Security, CCS'24, 2024, http://dx.doi.org/10.1145/3658644.3690254.

[37] S. Khandker, M. Guerra, E. Bitsikas, R.P. Jover, A. Ranganathan, C. Popper, ASTRA-5G: Automated over-the-air security testing and research architecture for 5G SA devices, in: PROCEEDINGS of the 17TH ACM CONFERENCE on SECURITY and PRIVACY in WIRELESS and MOBILE NETWORKS, WISEC 2024, Assoc Comp Machinery; ACM SIGSAC; ACM SIGMOBILE, 2024, pp. 89–100, http://dx.doi.org/10.1145/3643833.3656141, 17th ACM Conference on Security and Privacy in Wireless and Mobile Networks (WiSec), Seoul, SOUTH KOREA, MAY 27–29, 2024.

[38] M. Pauliac, USIM in 5G era, J. ICT Stand. 8 (1) (2020) 29–40, http://dx.doi.org/10.13052/jicts2245-800X.813.

[39] T.P. Lisowski, M. Chlosta, J. Wang, M. Muench, SIMurai: Slicing through the complexity of SIM card security research, in: 33rd USENIX Security Symposium, USENIX Security 24, USENIX Association, Philadelphia, PA, 2024, pp. 4481–4498, URL https://www.usenix.org/conference/usenixsecurity24/presentation/lisowski.

[40] 3GPP, TR 31.102: Characteristics of the universal subscriber identity module application, 2022.

[41] Z. Zhou, X. Han, Z. Chen, Y. Nan, J. Li, D. Gu, Simulation: Demystifying (insecure) cellular network based one-tap authentication services, in: 2022 52nd Annual IEEE/IFIP International Conference on Dependable Systems and Networks, DSN, 2022, pp. 534–546, http://dx.doi.org/10.1109/DSN53405.2022.00059.

[42] Ettus, USrp, 2025, URL https://www.ettus.com/products/.

[43] N. Ludant, P. Robyns, G. Noubir, From 5G sniffing to harvesting leakages of privacy-preserving messengers, in: 2023 IEEE Symposium on Security and Privacy, SP, 2023, pp. 3146–3161, http://dx.doi.org/10.1109/SP46215.2023.10179353.

[44] M. Kazemian, Investigating the jamming attack on 5G NR physical channels, 2024, arXiv:2408.03028. URL https://arxiv.org/abs/2408.03028.

[45] Y. Arjoune, S. Faruque, Smart jamming attacks in 5G new radio: A review, in: 2020 10th Annual Computing and Communication Workshop and Conference, CCWC, 2020, pp. 1010–1015, http://dx.doi.org/10.1109/CCWC47524.2020.9031175.

[46] M. Labib, V. Marojevic, J.H. Reed, A.I. Zaghloul, Enhancing the robustness of LTE systems: Analysis and evolution of the cell selection process, IEEE Commun. Mag. 55 (2) (2017) 208–215, http://dx.doi.org/10.1109/MCOM.2017.1500706CM.

[47] M. Labib, V. Marojevic, J.H. Reed, Analyzing and enhancing the resilience of LTE/LTE-A systems to RF spoofing, in: 2015 IEEE Conference on Standards for Communications and Networking, CSCN, 2015, pp. 315–320, http://dx.doi.org/10.1109/CSCN.2015.7390464.

[48] M. Labib, V. Marojevic, J.H. Reed, A.I. Zaghloul, How to enhance the immunity of LTE systems against RF spoofing, in: 2016 International Conference on Computing, Networking and Communications, ICNC, 2016, pp. 1–5, http://dx.doi.org/10.1109/ICCNC.2016.7440650.

[49] H. Yang, S. Bae, M. Son, H. Kim, S.M. Kim, Y. Kim, Hiding in plain signal: Physical signal overshadowing attack on LTE, in: 28th USENIX Security Symposium, USENIX Security 19, USENIX Association, Santa Clara, CA, 2019, pp. 55–72, URL https://www.usenix.org/conference/usenixsecurity19/presentation/yang-hojoon.

[50] N. Ludant, G. Noubir, SigUnder: A stealthy 5G low power attack and defenses, in: Proceedings of the 14th ACM Conference on Security and Privacy in Wireless and Mobile Networks, WiSec '21, Association for Computing Machinery, New York, NY, USA, 2021, pp. 250–260, http://dx.doi.org/10.1145/3448300.3467817, URL https://doi.org/10.1145/3448300.3467817.

[51] D. Yu, W. Wen, Non-access-stratum request attack in E-UTRAN, in: 2012 Computing, Communications and Applications Conference, 2012, pp. 48–53, http://dx.doi.org/10.1109/ComComAp.2012.6154001.

[52] D. Rupprecht, K. Kohls, T. Holz, C. Pöpper, Breaking LTE on layer two, in: 2019 IEEE Symposium on Security and Privacy, SP, 2019, pp. 1121–1136, http://dx.doi.org/10.1109/SP.2019.00006.

[53] Z. Tan, B. Ding, J. Zhao, Y. Guo, S. Lu, Data-plane signaling in cellular IoT: Attacks and defense, in: Proceedings of the 27th Annual International Conference on Mobile Computing and Networking, MobiCom '21, Association for Computing Machinery, New York, NY, USA, 2021, pp. 465–477, http://dx.doi.org/10.1145/3447993.3483255, URL https://doi.org/10.1145/3447993.3483255.

[54] Z. Tan, J. Zhao, B. Ding, S. Lu, Celldam: User-space, rootless detection and mitigation for 5G data plane, in: PROCEEDINGS of the 20TH USENIX SYMPOSIUM on NETWORKED SYSTEMS DESIGN and IMPLEMENTATION, NSDI 2023, USENIX; ACM SIGOPS; Amazon; Futurewei Technologies; Google; Meta; NetApp; Two Sigma; NSF; ByteDance; Vmware Univ Res Fund; King Abdullah Univ Sci & Technol, 2023, pp. 1601–1619, 20th USENIX Symposium on Networked Systems Design and Implementation (NSDI), Boston, MA, APR 17–19, 2023.

[55] D. Rupprecht, K. Kohls, T. Holz, C. Pöpper, IMP4GT: impersonation attacks in 4G networks, in: 27th Annual Network and Distributed System Security Symposium, NDSS 2020, San Diego, California, USA, February 23–26, 2020, The Internet Society, 2020, URL https://www.ndss-symposium.org/ndss-paper/imp4gt-impersonation-attacks-in-4g-networks/.

[56] S. Nie, S. Li, L. Xue, L. Zhang, Security analysis of 5G handover in commercial networks utilizing a formal method, in: 2023 11th International Conference on Information Systems and Computing Technology, ISCTech, 2023, pp. 439–446, http://dx.doi.org/10.1109/ISCTech60480.2023.00086.

[57] S.R. Hussain, M. Echeverria, I. Karim, O. Chowdhury, E. Bertino, 5Greasoner: A property-directed security and privacy analysis framework for 5G cellular network protocol, in: Proceedings of the 2019 ACM SIGSAC Conference on Computer and Communications Security, CCS '19, Association for Computing Machinery, New York, NY, USA, 2019, pp. 669–684, http://dx.doi.org/10.1145/3319535.3354263, URL https://doi.org/10.1145/3319535.3354263.

[58] R. Borgaonkar, L. Hirschi, S. Park, A. Shaik, New privacy threat on 3G, 4G, and upcoming 5G AKA protocols, PoPETs - Proc. Priv. Enhancing Technol. (2019) 108–127.

[59] C. Yu, S. Chen, F. Wang, Z. Wei, Improving 4G/5G air interface security: A survey of existing attacks on different LTE layers, Comput. Netw. 201 (2021) 108532, http://dx.doi.org/10.1016/j.comnet.2021.108532, URL https://www.sciencedirect.com/science/article/pii/S1389128621004576.

[60] B. Karakoc, N. Fürste, D. Rupprecht, K. Kohls, Never let me down again: Bidding-down attacks and mitigations in 5G and 4G, in: Proceedings of the 16th ACM Conference on Security and Privacy in Wireless and Mobile Networks, WiSec '23, Association for Computing Machinery, New York, NY, USA, 2023, pp. 97–108, http://dx.doi.org/10.1145/3558482.3581774, URL https://doi.org/10.1145/3558482.3581774.

[61] HatLab, Geekpwn2020 LTE project technology resumption, 2020, URL https://cn-sec.com/archives/171230.html.

[62] J. Xing, S. Yoo, X. Foukas, D. Kim, M.K. Reiter, On the criticality of integrity protection in 5G fronthaul networks, in: 33rd USENIX Security Symposium, USENIX Security 24, USENIX Association, Philadelphia, PA, 2024, pp. 4463–4479, URL https://www.usenix.org/conference/usenixsecurity24/presentation/xing-jiarong.

[63] M. Shafi, R.K. Jha, M. Sabraj, A survey on security issues of 5G NR: Perspective of artificial dust and artificial rain, J. Netw. Comput. Appl. 160 (2020) 102597, http://dx.doi.org/10.1016/j.jnca.2020.102597, URL https://www.sciencedirect.com/science/article/pii/S1084804520300710.

[64] S.F. Mjølsnes, R.F. Olimid, Easy 4G/LTE IMSI catchers for non-programmers, in: J. Rak, J. Bay, I. Kotenko, L. Popyack, V. Skormin, K. Szczypiorski (Eds.), Computer Network Security, Springer International Publishing, Cham, 2017, pp. 235–246.

[65] E. Bitsikas, C. Pöpper, Don't hand it over: Vulnerabilities in the handover procedure of cellular telecommunications, in: Proceedings of the 37th Annual Computer Security Applications Conference, ACSAC '21, Association for Computing Machinery, New York, NY, USA, 2021, pp. 900–915, http://dx.doi.org/10.1145/3485832.3485914, URL https://doi.org/10.1145/3485832.3485914.

[66] D. Talbot, One simple trick could disable a city's 4G phone network, 2012, URL https://www.technologyreview.com/2012/11/14/84825/one-simple-trick-could-disable-a-citys-4g-phone-network/.

[67] M. Lichtman, R.P. Jover, M. Labib, R. Rao, V. Marojevic, J.H. Reed, LTE/LTE-A jamming, spoofing, and sniffing: Threat assessment and mitigation, IEEE Commun. Mag. 54 (4) (2016) 54–61, http://dx.doi.org/10.1109/MCOM.2016.7452266.

[68] T. Pushpalata, S.Y. Chaudhari, Need of physical layer security in LTE: Analysis of vulnerabilities in LTE physical layer, in: 2017 International Conference on Wireless Communications, Signal Processing and Networking, WiSPNET, 2017, pp. 1722–1727, http://dx.doi.org/10.1109/WiSPNET.2017.8300057.

[69] R.M. Rao, S. Ha, V. Marojevic, J.H. Reed, LTE PHY layer vulnerability analysis and testing using open-source sdr tools, in: MILCOM 2017 - 2017 IEEE Military Communications Conference, MILCOM, 2017, pp. 744–749, http://dx.doi.org/10.1109/MILCOM.2017.8170787.

[70] C. Pöpper, N.O. Tippenhauer, B. Danev, S. Capkun, Investigation of signal and message manipulations on the wireless channel, in: V. Atluri, C. Diaz (Eds.), Computer Security – ESORICS 2011, Springer Berlin Heidelberg, Berlin, Heidelberg, 2011, pp. 40–59.

[71] S.R. Hussain, M. Echeverria, A. Singla, O. Chowdhury, E. Bertino, Insecure connection bootstrapping in cellular networks: The root of all evil, in: Proceedings of the 12th Conference on Security and Privacy in Wireless and Mobile Networks, WiSec '19, Association for Computing Machinery, New York, NY, USA, 2019, pp. 1–11, http://dx.doi.org/10.1145/3317549.3323402, URL https://doi.org/10.1145/3317549.3323402.

[72] O. Lasierra, G. Garcia-Aviles, E. Municio, A. Skarmeta, X. Costa-Pérez, European 5G security in the wild: Reality versus expectations, in: Proceedings of the 16th ACM Conference on Security and Privacy in Wireless and Mobile Networks, WiSec '23, Association for Computing Machinery, New York, NY, USA, 2023, pp. 13–18, http://dx.doi.org/10.1145/3558482.3581776, URL https://doi.org/10.1145/3558482.3581776.

[73] T. Heijligenberg, G. Knips, C. Böhm, D. Rupprecht, K. Kohls, BigMac: Performance overhead of user plane integrity protection in 5G networks, in: Proceedings of the 16th ACM Conference on Security and Privacy in Wireless and Mobile Networks, WiSec '23, Association for Computing Machinery, New York, NY, USA, 2023, pp. 145–150, http://dx.doi.org/10.1145/3558482.3581777, URL https://doi.org/10.1145/3558482.3581777.

[74] 3GPP, TS 38.331: Radio Resource Control (RRC), 3rd Generation Partnership Project (3GPP), 2023.

[75] H. Kim, J. Lee, E. Lee, Y. Kim, Touching the untouchables: Dynamic security analysis of the LTE control plane, in: 2019 IEEE Symposium on Security and Privacy, SP, 2019, pp. 1153–1168, http://dx.doi.org/10.1109/SP.2019.00038.

[76] C. Cooperation, Common public radio interface: eCPRI interface specification V2.0, 2019.

[77] Ericsson, Packet fronthaul—Design choices towards versatile RAN deployment, 2021, URL https://www.ericsson.com/en/reports-andpapers/white-papers/packet-fronthaul-design-choices.

[78] 3GPP, TS23.502: Procedures for the 5G System (5GS), 3rd Generation Partnership Project (3GPP), 2024.

[79] S. Zhang, Y. Wang, W. Zhou, Towards secure 5G networks: A survey, Comput. Netw. 162 (2019) 106871, http://dx.doi.org/10.1016/j.comnet.2019.106871, URL https://www.sciencedirect.com/science/article/pii/S138912861830817X.

[80] R.F. Olimid, G. Nencioni, 5G network slicing: A security overview, IEEE Access 8 (2020) 99999–100009, http://dx.doi.org/10.1109/ACCESS.2020.2997702.

[81] 3GPP, TR33.811: Study on Security Aspects of 5G Network Slicing Management, 3rd Generation Partnership Project (3GPP), 2017.

[82] V.N. Sathi, C.S.R. Murthy, Distributed slice mobility attack: A novel targeted attack against network slices of 5G networks, IEEE Netw. Lett. 3 (1) (2021) 5–9, http://dx.doi.org/10.1109/LNET.2020.3044642.

[83] M. Akon, T. Yang, Y. Dong, S.R. Hussain, Formal analysis of access control mechanism of 5G core network, in: PROCEEDINGS of the 2023 ACM SIGSAC CONFERENCE on COMPUTER and COMMUNICATIONS SECURITY, CCS 2023, Assoc Comp Machinery; ACM SIGSAC; Huawei; Natl Sci Fdn; Technol Innovat Inst; Twenty Second Century Dora Technol; Ant Res; IBM; TikTok; Abelian; Input Outut, 2023, pp. 666–680, http://dx.doi.org/10.1145/3576915.3623113, 30th ACM SIGSAC Conference on Computer and Communications Security (ACM CCS), Copenhagen, DENMARK, NOV 26–30, 2023.

[84] L. Li, J. Wu, H. Hu, W. Liu, Z. Guo, Secure cloud architecture for 5G core network, Chin. J. Electron. (2021) 516–522.

[85] S. Warnat, H. King, A. Wasay, D. Sameoto, T. Hubbard, Overview of 5G security challenges and solutions, IEEE Commun. Stand. Mag. (2018) 36–43.

[86] A. Shaik, S. Park, Attacks from a new front door in 4G and 5G mobile networks, 2022, URL https://i.blackhat.com/USA-22/Wednesday/US-22-Shaik-Attacks-From-a-New-Front-Door-in-4G-5G-Mobile-Networks.pdf.

[87] E.K. Virgil, B. Nathaniel, T. Seaver, B.K.R. B., E. William, T. Patrick, Examining cryptography and randomness failures in open-source cellular cores, in: Proceedings of the Fourteenth ACM Conference on Data and Application Security and Privacy, CODASPY '24, Association for Computing Machinery, New York, NY, USA, 2024, pp. 43–54, http://dx.doi.org/10.1145/3626232.3653259, URL https://doi.org/10.1145/3626232.3653259.

[88] M.M. Sajjad, C.J. Bernardos, D. Jayalath, Y.-C. Tian, Inter-slice mobility management in 5G: Motivations, standard principles, challenges, and research directions, IEEE Commun. Stand. Mag. 6 (1) (2022) 93–100, http://dx.doi.org/10.1109/MCOMSTD.0001.2000025.

[89] 3GPP, TS23.501: System Architecture for the 5G System and Stage 2, 3rd Generation Partnership Project (3GPP), 2020.

[90] firecell, Private 5G made simple, 2023, URL https://firecell.io/.

[91] RAK, All-in-one.5G, 2023, URL https://www.rakwireless.com/en-us/5g.

[92] R. Schmidt, openairinterface5G, 2024, URL https://gitlab.eurecom.fr/oai/openairinterface5g.

[93] N.Y.M.C.T. University, free5GC, 2024, URL https://free5gc.org.

[94] E. Kim, D. Kim, C. Park, I. Yun, Y. Kim, BaseSpec: Comparative analysis of baseband software and cellular specifications for L3 protocols, in: 28th Annual Network and Distributed System Security Symposium, NDSS 2021, Virtually, February 21–25, 2021, The Internet Society, 2021, URL https://www.ndss-symposium.org/ndss-paper/basespec-comparative-analysis-of-baseband-software-and-cellular-specifications-for-l3-protocols/.

[95] Y. Chen, D. Tang, Y. Yao, M. Zha, X. Wang, X. Liu, H. Tang, B. Liu, Sherlock on specs: Building LTE conformance tests through automated reasoning, in: 32nd USENIX Security Symposium, USENIX Security 23, USENIX Association, Anaheim, CA, 2023, pp. 3529–3545, URL https://www.usenix.org/conference/usenixsecurity23/presentation/chen-yi.

[96] I. Ahmad, T. Kumar, M. Liyanage, J. Okwuibe, M. Ylianttila, A. Gurtov, Overview of 5G security challenges and solutions, IEEE Commun. Stand. Mag. 2 (1) (2018) 36–43, http://dx.doi.org/10.1109/MCOMSTD.2018.1700063.